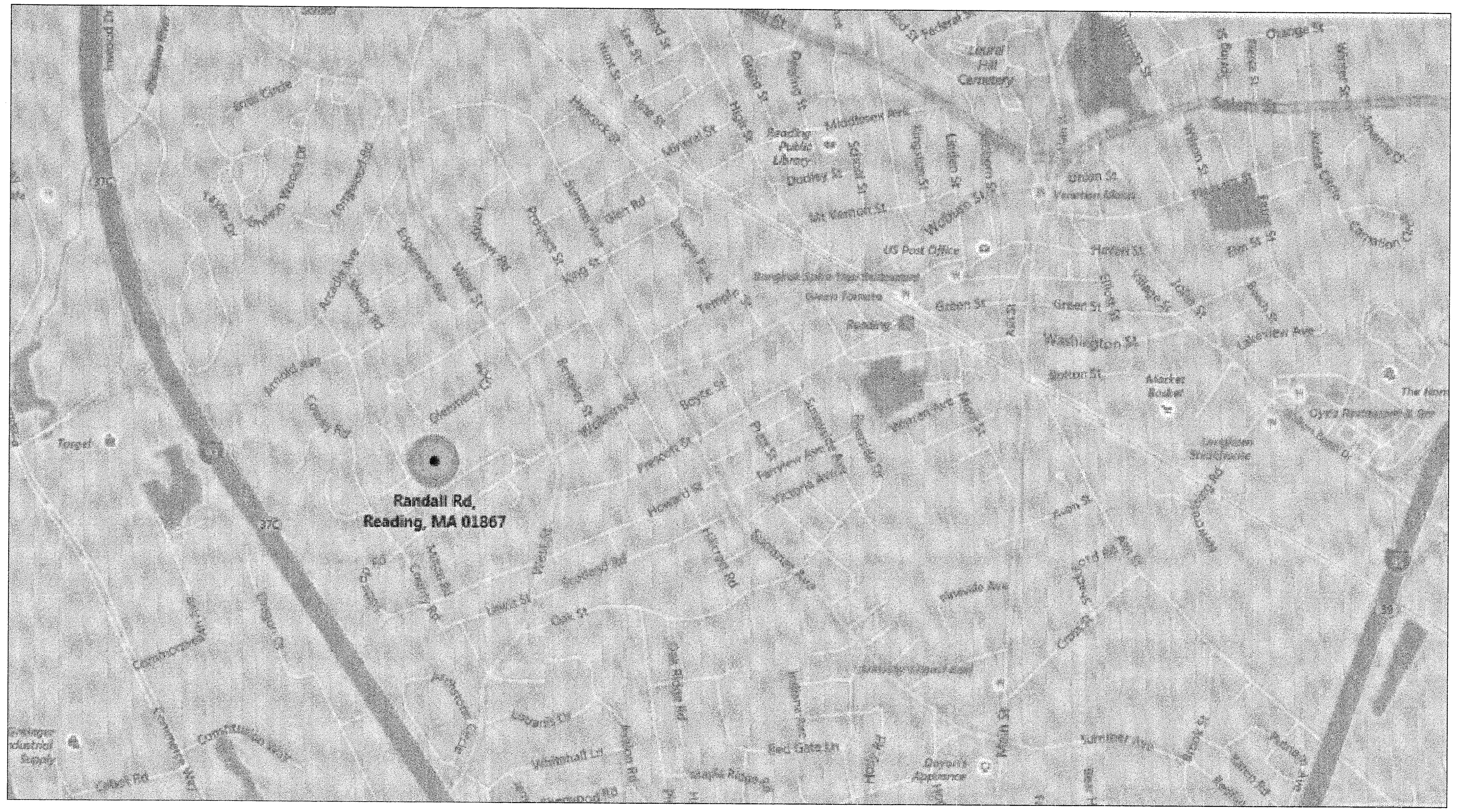

LOCUS
NOT TO SCALE

GENERAL NOTES:

1. ALL MATERIALS AND WORKMANSHIP SHALL CONFORM TO THE STANDARDS OF THE READING PUBLIC WORKS DEPARTMENT.
2. THE LOCATION OF EXISTING UNDERGROUND UTILITES HAVE NOT BEEN FIELD VERIFIED. THE CONTRACTOR SHALL VERIFY THEIR LOCATION PRIOR TO CONSTRUCTION. "DIG SAFE" SHALL BE CONTACTED AT 1-888-344-7233. MASSACHUSETTS STATE LAW REQUIRES THREE BUSINESS DAYS NOTICE PRIOR TO EXCAVATION.
3. REFERENCE ASSESSOR MAP 15 PARCELS 5,6,7,8 MAP 10 PARCELS 294,296

INDEX

SHEET 1	COVER
SHEET 2	LOCUS PLAN
SHEET 3	EXISTING CONDITIONS PLAN
SHEET 4	RECORD PLAN
SHEET 5	GRADING AND EROSION CONTROL
SHEET 6	ROADWAY AND UTILITIES
SHEET 7	STORMWATER DETAILS
SHEET 8	MISCELLANEOUS DETAILS

OWNER

ASSESSORS MAP 15 PARCELS 5,6,7,8
WILLIAM P. ANGELINI Jr.
C/O LISA ADAMS
4 POWERS CT.
BOSTON, MA 02109

OWNER

ASSESSORS MAP 10 PARCELS 294 & 296
KENNETH & LAUREN KESSARIS
25 SPRINGVALE RD
READING, MA 01867

APPLICANT

MARK G HALL
286 PARK STREET
NORTH READING, MA 01864

LEGEND

EXISTING CONTOUR	100
EXISTING SEWER LINE	S
EXISTING WATER LINE	W
EXISTING DRAIN LINE	D
PROPOSED 8" CLDI WATER LINE	PW
PROPOSED 12" DRAIN LINE	PD
PROPOSED 8 " SEWER LINE	PS
EDGE OF WETLANDS	
PROPOSED ELEC,TEL,CABLE	
LOT FRONTAGE	((100.00))
EXISTING FIRE HYDRANT	
PROPOSED FIRE HYDRANT	
INFILTRATION CHAMBER	
TREE BOX FILTER	TB
PROP. EROSION CONTROL	
PROPOSED TREE	

LOT AREA CALCULATIONS

LOT	TOTAL AREA
1	18,675 SF
2	19,172
3	15,011
25 Springvale Rd	15,000
Randall Rd. Ext	13,401
Total	81,529 SF

ZONING DIMENSIONAL REQUIREMENTS

ZONING DISTRICT: S15

MIN. LOT AREA	15,000 SF
MIN. LOT FRONTAGE	100 L.F.
MAX. STORIES	--
MAX. HEIGHT	35 FT
MAX. BUILDING AREA	--
FRONT YARD SETBACK	20 FT
SIDE YARD SETBACK	15 FT
REAR YARD SETBACK	20 FT

20 0 10 20 40 80
(IN FEET)
1 inch = 40 ft.

TOWN OF READING COMMUNITY
PLANNING & DEVELOPMENT COMMISSION

DATE

DATE	BY	REVISION

DEFINITIVE SUBDIVISION PLAN
RANDALL ROAD EXTENSION
READING, MA 01867

COMMONWEALTH OF MASSACHUSETTS
JOHN F. McGUILKIN Jr.
CIVIL
No. 31262
REGISTERED PROFESSIONAL ENGINEER

SCALE: NOT TO SCALE

DATE: SEPT 26, 2016

Prepared For:
MG Hall Contractors
286 Park Street
North Reading, MA 01923

JM Associates
325 Main Street
N. Reading, MA 01864
978-664-6668
www.jmassociateseng.com

JOB#373-572

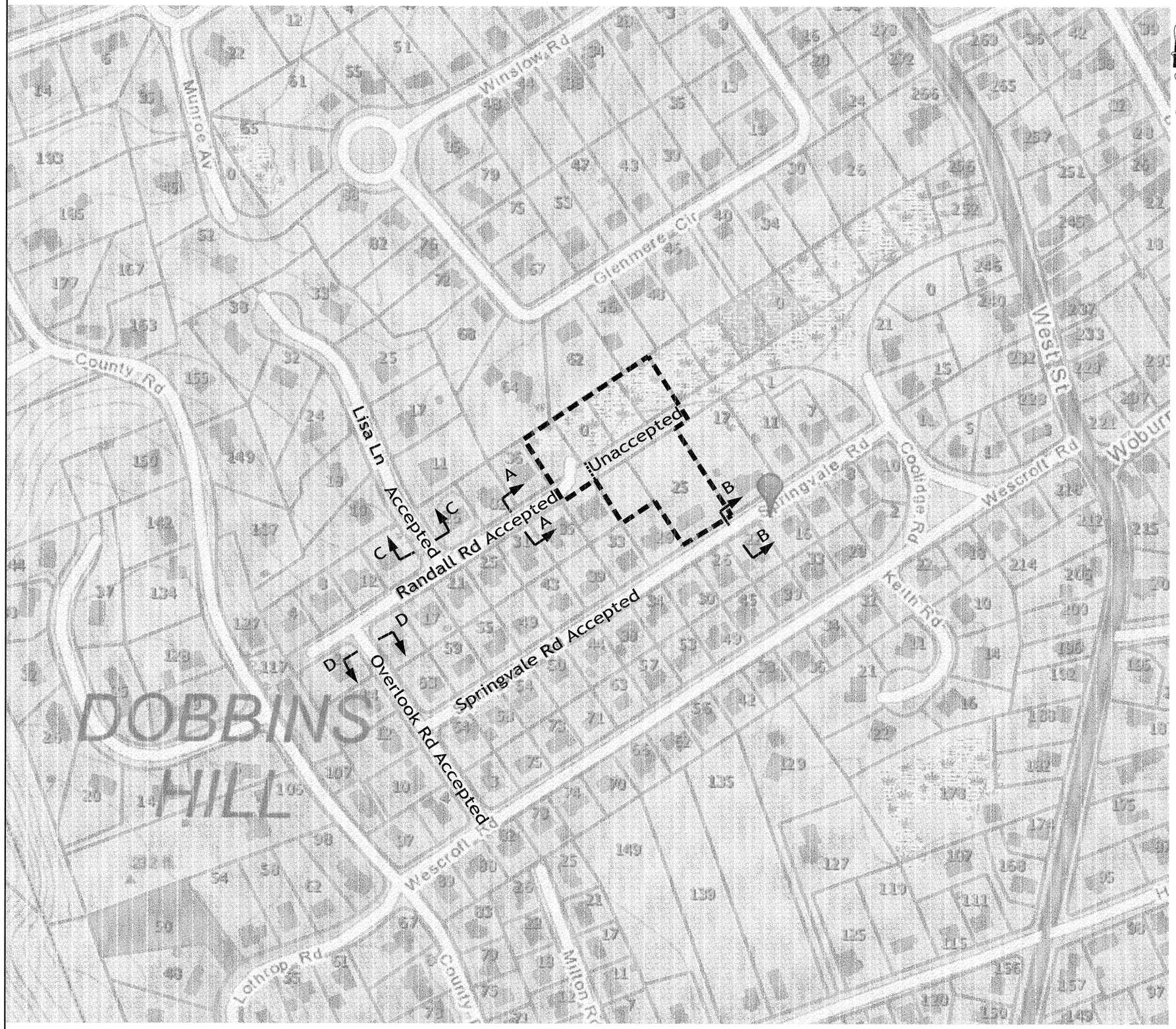

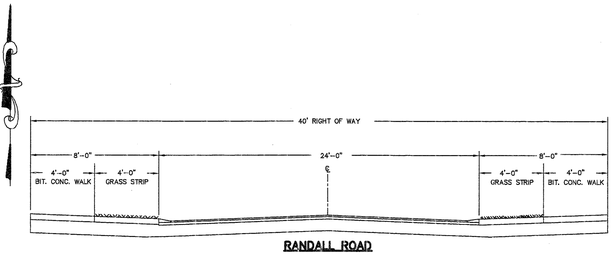

RANDALL ROAD
SECTION A–A

NOT TO SCALE

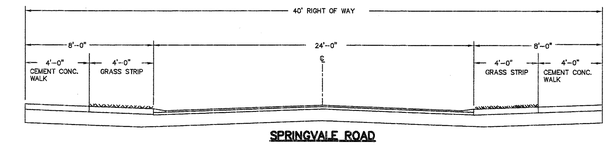

SPRINGVALE ROAD
SECTION B–B

NOT TO SCALE

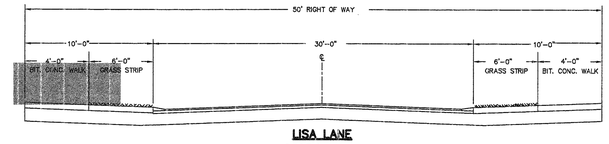

LISA LANE
SECTION C–C

NOT TO SCALE

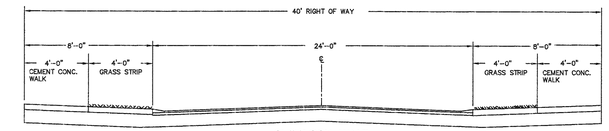

OVERLOOK ROAD
SECTION D–D

NOT TO SCALE

TOWN OF READING COMMUNITY
PLANNING & DEVELOPMENT COMMISSION

DATE

DATE	BY	REVISION

DEFINITIVE SUBDIVISION PLAN
LOCUS PLAN
RANDALL ROAD EXTENSION
READING, MA 01867

COMMONWEALTH OF MASSACHUSETTS
JOHN F. McDONNELL JR.
CIVIL
NO. 31262
REGISTERED PROFESSIONAL ENGINEER

SCALE: 1"=100'

DATE: SEPT 26, 2016

Prepared For:
MG Hall Contractors
286 Park Street
North Reading, MA 01923

JM Associates
325 Main Street
N. Reading, MA 01864
978–664–6668
www.jmassociateseng.com

JOB#373-572

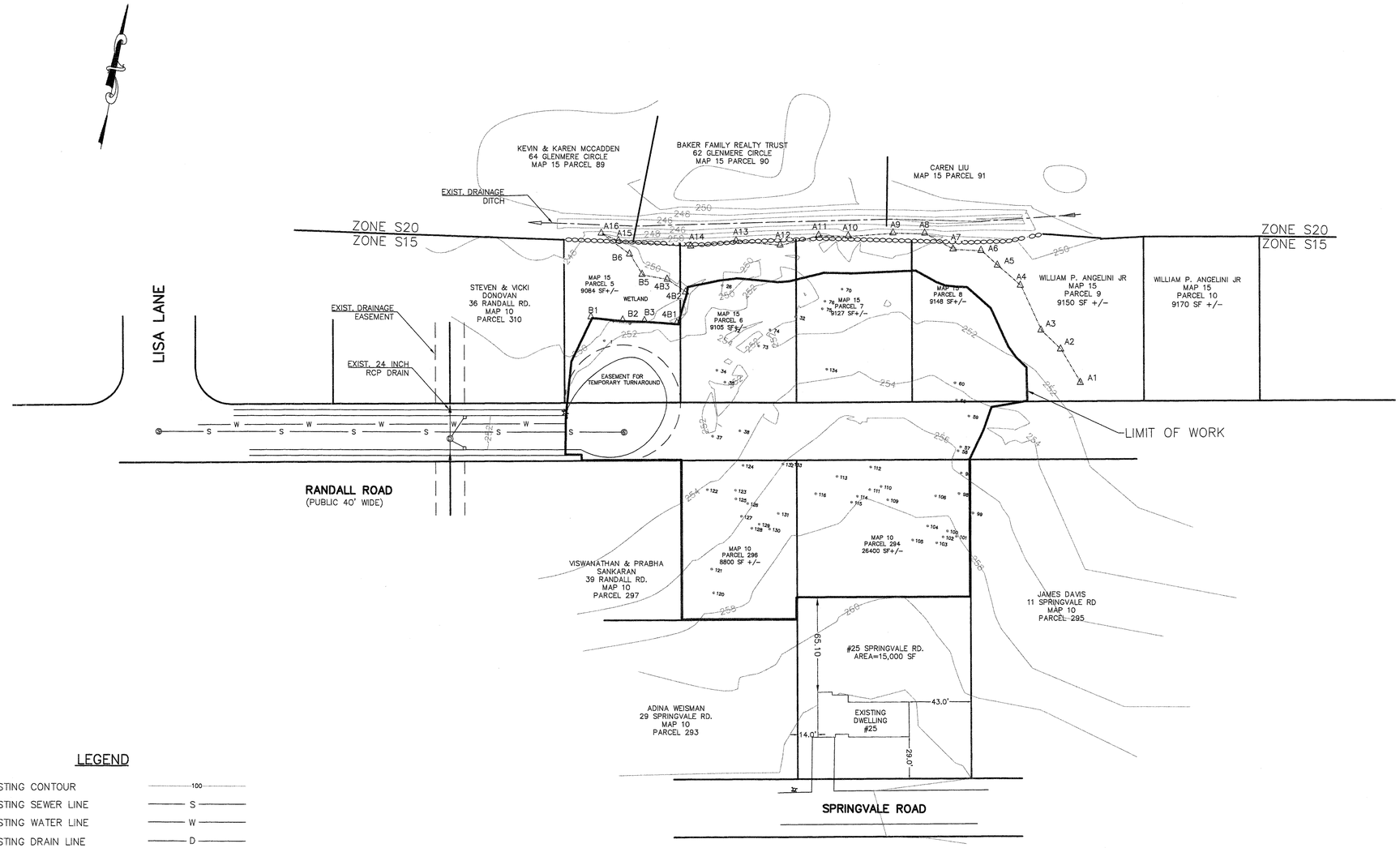

NON INVASIVE TREES WITHIN LIMIT OF WORK
DBH > 6 INCHES

TREE #	SPECIES	DBH (INCHES)
1	Red maple (Acer rubrum)	15
4	Red maple (Acer rubrum)	7
5	Red maple (Acer rubrum	8
26	Red maple (Acer rubrum)	27
32	Red maple (Acer rubrum)	19
34	White ash (Faxinus american)	19
35	Red maple (Acer rubrum)	15
37	Red oak (Quercus rubra)	17
38	American elm (Ulmus americana)	6
57	Red maple (Acer rubrum)	15
58	Red maple (Acer rubrum)	18
59	Red maple (Acer rubrum)	17
60	White ash (Faxinus american)	10
70	Red maple (Acer rubrum)	24
72	Red maple (Acer rubrum)	10
73	American elm (Ulmus americana)	6
74	American elm (Ulmus americana)	6
75	Red maple (Acer rubrum	12
76	Red maple (Acer rubrum	7
96	Red maple (Acer rubrum)	19
98	White pine (Pinus strobus)	12
99	Red maple (Acer rubrum)	18
100	White pine (Pinus strobus)	10
101	Red oak (Quercus rubra)	14
102	Red maple (Acer rubrum)	17
103	Red maple (Acer rubrum)	13
104	Red maple (Acer rubrum)	18
105	Red maple (Acer rubrum)	18
106	Red maple (Acer rubrum)	15
109	White pine (Pinus strobus)	9
110	Red maple (Acer rubrum)	16
111	Red maple (Acer rubrum)	10
112	American elm (Ulmus americana)	6
113	Silver maple (Acer saccarinum)	18
114	Red cedar (Juniperus virginianaa)	7
115	Red maple (Acer rubrum)	17
116	Red maple (Acer rubrum)	19
120	Blue spruce (Picea pungens)	10
121	Blue spruce (Picea pungens)	7
122	Sycamore (Platanus occidentalis)	21
123	Red maple (Acer rubrum)	21
124	Red maple (Acer rubrum)	21
125	Red maple (Acer rubrum)	21
126	Red maple (Acer rubrum)	11
127	Red maple (Acer rubrum)	9
128	Red maple (Acer rubrum)	19
129	Red maple (Acer rubrum)	16
130	Red maple (Acer rubrum)	18
131	Red maple (Acer rubrum)	17
132	Red maple (Acer rubrum)	18
133	Red maple (Acer rubrum)	10
134	Red maple (Acer rubrum)	17

LEGEND

EXISTING CONTOUR	100
EXISTING SEWER LINE	S
EXISTING WATER LINE	W
EXISTING DRAIN LINE	D
PROPOSED 8" CLDI WATER LINE	PW
PROPOSED 12" DRAIN LINE	PD
PROPOSED 8 " SEWER LINE	PS
EDGE OF WETLANDS	
PROPOSED ELEC,TEL,CABLE	
LOT FRONTAGE	((100.00))
EXISTING FIRE HYDRANT	
PROPOSED FIRE HYDRANT	
INFILTRATION CHAMBER	
TREE BOX FILTER	TB
PROP. EROSION CONTROL	
PROPOSED TREE	

20 0 10 20 40 80
(IN FEET)
1 inch = 40 ft.

TOWN OF READING COMMUNITY
PLANNING & DEVELOPMENT COMMISSION

DATE

DATE	BY	REVISION

DEFINITIVE SUBDIVISION PLAN
EXISTING CONDITIONS
RANDALL ROAD EXTENSION
READING, MA 01867

COMMONWEALTH OF MASSACHUSETTS
JOHN F. McCULLEN Jr.
CIVIL
NO. 31262
REGISTERED PROFESSIONAL ENGINEER

SCALE: 1"=40'

DATE: SEPT. 26, 2016

Prepared For:
MG Hall Contractors
286 Park Street
North Reading, MA 01923

JM Associates
325 Main Street
N. Reading, MA 01864
978-664-6668
www.jmassociateseng.com

JOB#373-572

SH. 3 OF 8

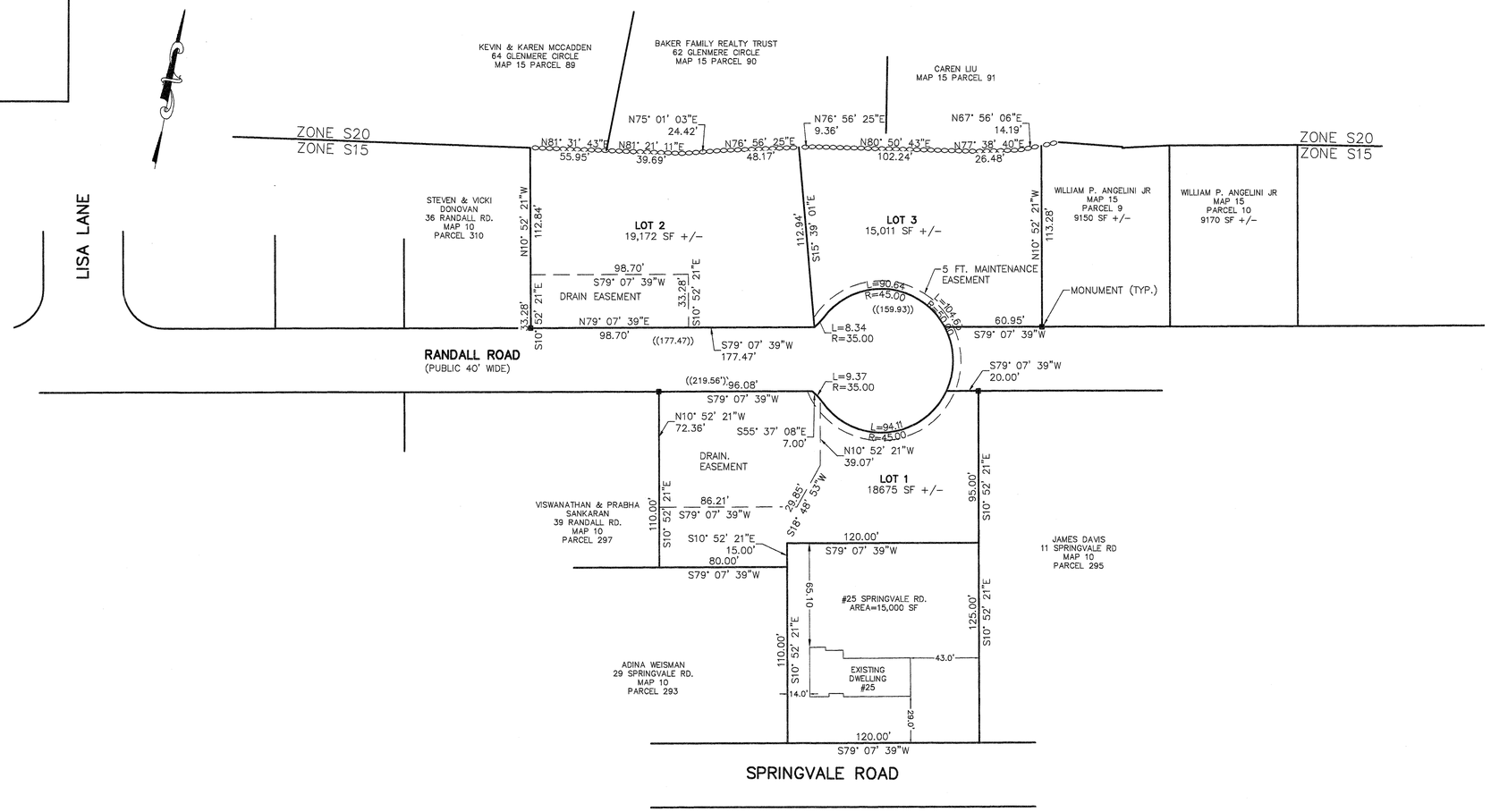

REFERENCES

1. TITLE REFERENCES MSRD BOOK 27955 PAGE 248
   MSRD BOOK 64007 PAGE 514
2. PLAN REFERENCES
   MSRD 801 1976
   MSRD 313 1970
   MSRD 381 1940

DEFINITIVE PLAN AND PROFILE, RANDALL RD, READING
PREPARED BY HAYES ENGINEERING 12.31.1968

OWNER

ASSESSORS MAP 15 PARCELS 5,6,7,8
WILLIAM P. ANGELINI Jr.
C/O LISA ADAMS
4 POWERS CT.
BOSTON, MA 02109

OWNER

ASSESSORS MAP 10 PARCELS 294 & 296
KENNETH & LAUREN KESSARIS
25 SPRINGVALE RD
READING, MA 01867

APPLICANT

MARK G HALL
286 PARK STREET
NORTH READING, MA 01864

LEGEND

EXISTING CONTOUR	100
EXISTING SEWER LINE	S
EXISTING WATER LINE	W
EXISTING DRAIN LINE	D
PROPOSED 8" CLDI WATER LINE	PW
PROPOSED 12" DRAIN LINE	PD
PROPOSED 8 " SEWER LINE	PS
EDGE OF WETLANDS	
PROPOSED ELEC,TEL,CABLE	
LOT FRONTAGE	((100.00))
EXISTING FIRE HYDRANT	
PROPOSED FIRE HYDRANT	
INFILTRATION CHAMBER	
TREE BOX FILTER	TB
PROP. EROSION CONTROL	
PROPOSED TREE	

TABLE OF DIMENSIONAL REQUIREMENTS

S-15 DISTRICT	REQUIRED	LOT 1	LOT 2	LOT 3	25 SPRINGVALE
AREA	15,000 SF	18,675 SF±	19,172 SF±	15,011 SF±	15,000 SF±
FRONTAGE	100 FT	219.56 FT	177.47 FT	159.93 FT	120.00 FT
FRONT YARD	20 FT	NA	NA	NA	29.0 FT
SIDE YARD	15 FT	NA	NA	NA	14.0 FT
REAR YARD	20 FT	NA	NA	NA	65.1 FT

LOT SHAPE TABLE

LOT	AREA	PERIMETER	AREA X 22	PERIM. SQUARED	UPLAND AREA
1	18,675	639.5	410,850	409,037	18,675
2	19,172 SF	571.5 FT	421790.6	326612.3	13,873 SF
3	15,011 SF	538.4 FT	330250.8	289874.6	14,202 SF
25 SPRINGVALE RD	15,000 SF	490.0 FT	330,000	240010	15,000 SF

(AREA OF GEOMETRIC SHAPE) x 22 > (PERIMETER OF GEOMETRIC SHAPE)

20 0 10 20 40 80

(IN FEET)
1 inch = 40 ft.

I HEREBY CERTIFY THAT THIS PLAN WAS PREPARED IN ACCORDANCE WITH UNIFORM INSTRUCTIONS FOR THE PREPARATION OF PLANS AS SET FORTH BY THE

John M. Maquilkin 9.26.16
DATE

TOWN OF READING COMMUNITY
PLANNING & DEVELOPMENT COMMISSION

DATE

DATE	BY	REVISION

DEFINITIVE SUBDIVISION PLAN
RECORD PLAN
RANDALL ROAD EXTENSION
READING, MA 01867

SCALE: 1"=40'

DATE: SEPT 26, 2016

Prepared For:
MG Hall Contractors
286 Park Street
North Reading, MA 01923

JM Associates
325 Main Street
N. Reading, MA 01864
978-664-6668
www.jmassociateseng.com

COMMONWEALTH OF MASSACHUSETTS
JOHN M. MAQUILKIN
No. 36120
PROFESSIONAL LAND SURVEYOR

JOB#373-572

SH. 4 OF 8

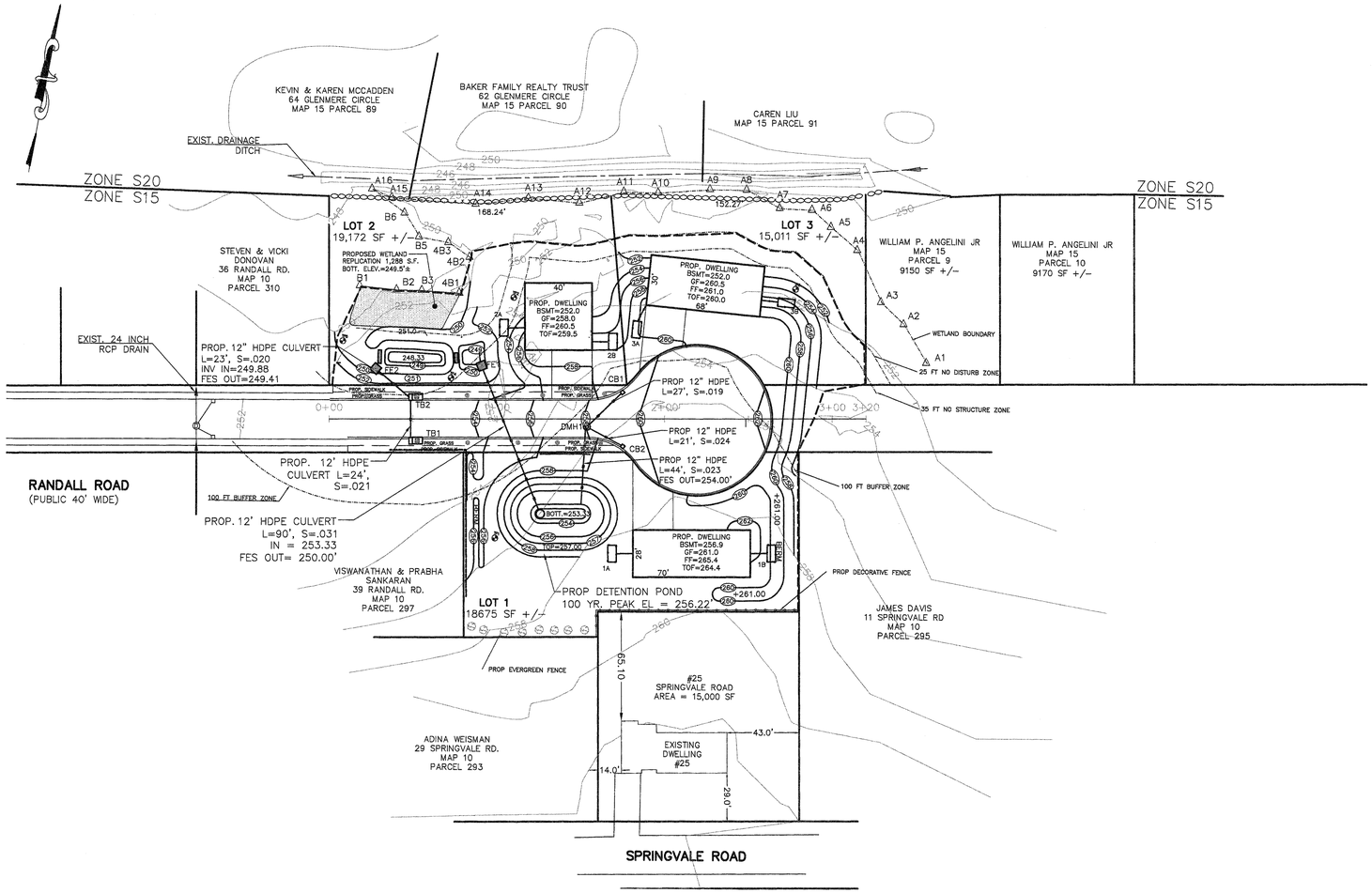

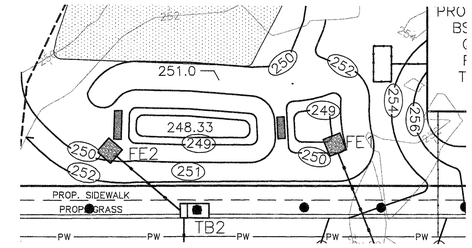

WATER QUALITY SWALE
1'=20'

PROPOSED DRAINAGE STRUCTURES

CB-1
STA 1+74.6 18.1'R
RIM= 259.00
INV= 256.50

CB-2
STA 1+74.6 17.5'R
RIM= 259.00
INV= 256.50

TB-1
STA 0+53.0 12'R
INLET= 253.30
INV= 250.38

TB-2
STA 0+53.0 12'L
INLET= 253.30
INV IN= 249.88
INV OUT=24988

DMH 1
STA 1+54.0 4.6'R
RIM= 258.05
INV IN= 255.10
INV OUT=255.00

FE1 = 250.50

FE2 = 250.00

LEGEND

EXISTING CONTOUR	100
EXISTING SEWER LINE	S
EXISTING WATER LINE	W
EXISTING DRAIN LINE	D
PROPOSED 8" CLDI WATER LINE	PW
PROPOSED 12" DRAIN LINE	PD
PROPOSED 8 " SEWER LINE	PS
EDGE OF WETLANDS	
PROPOSED ELEC,TEL,CABLE	
LOT FRONTAGE	((100.00))
EXISTING FIRE HYDRANT	
PROPOSED FIRE HYDRANT	
INFILTRATION CHAMBER	
TREE BOX FILTER	TB
PROP. EROSION CONTROL	
PROPOSED TREE	

EROSION CONTROL NOTES:

1. PRIOR TO ANY EARTH MOVEMENT ON THE SITE, EROSION CONTROL SHALL BE SET UP AND STAKED IN A PERMANENT MANNER AS SHOWN ON THE DRAWINGS.
2. IMMEDIATELY UPON THE CONSTRUCTION OF THE CATCH BASINS, SILT SACKS SHALL BE SET IN THE INLET TO PREVENT SEDIMENTS FROM ENTERING THE DRAINAGE SYSTEMS.
3. THE EROSION CONTROL AND SEDIMENTATION BARRIERS SHALL BE MAINTAINED CONTINUOUSLY UNTIL ALL DISTURBED AREAS HAVE BEEN REVEGETATED.
4. UNLESS OTHERWISE NOTED, ALL SEDIMENT FOREBAYS, SWALES, CHANNELS AND DETENTION POND SIDE SLOPES AND ANY OTHER EXPOSED SURFACE SHALL BE COVERED WITH 6 INCHES OF LOAM AND SEEDED WITH AN APPROVED GRASS SEED MIXTURE.

NOTES:

1. WETLANDS DELINEATED BY NORSE ENVIRONMENTAL SERVICES OCTOBER 2015

TOWN OF READING COMMUNITY
PLANNING & DEVELOPMENT COMMISSION

DATE

DATE	BY	REVISION

DEFINITIVE SUBDIVISION PLAN
GRADING & EROSION CONTROL PLAN
RANDALL ROAD EXTENSION
READING, MA 01867

COMMONWEALTH OF MASSACHUSETTS
JOHN F. MCCULKIN Jr.
CIVIL
No. 31262
REGISTERED PROFESSIONAL ENGINEER

SCALE: 1"=40'

DATE: SEPT 26, 2016

Prepared For:
MG Hall Contractors
286 Park Street
North Reading, MA 01923

JM Associates
325 Main Street
N. Reading, MA 01864
978-664-6668
www.jmassociateseng.com

JOB#373-572

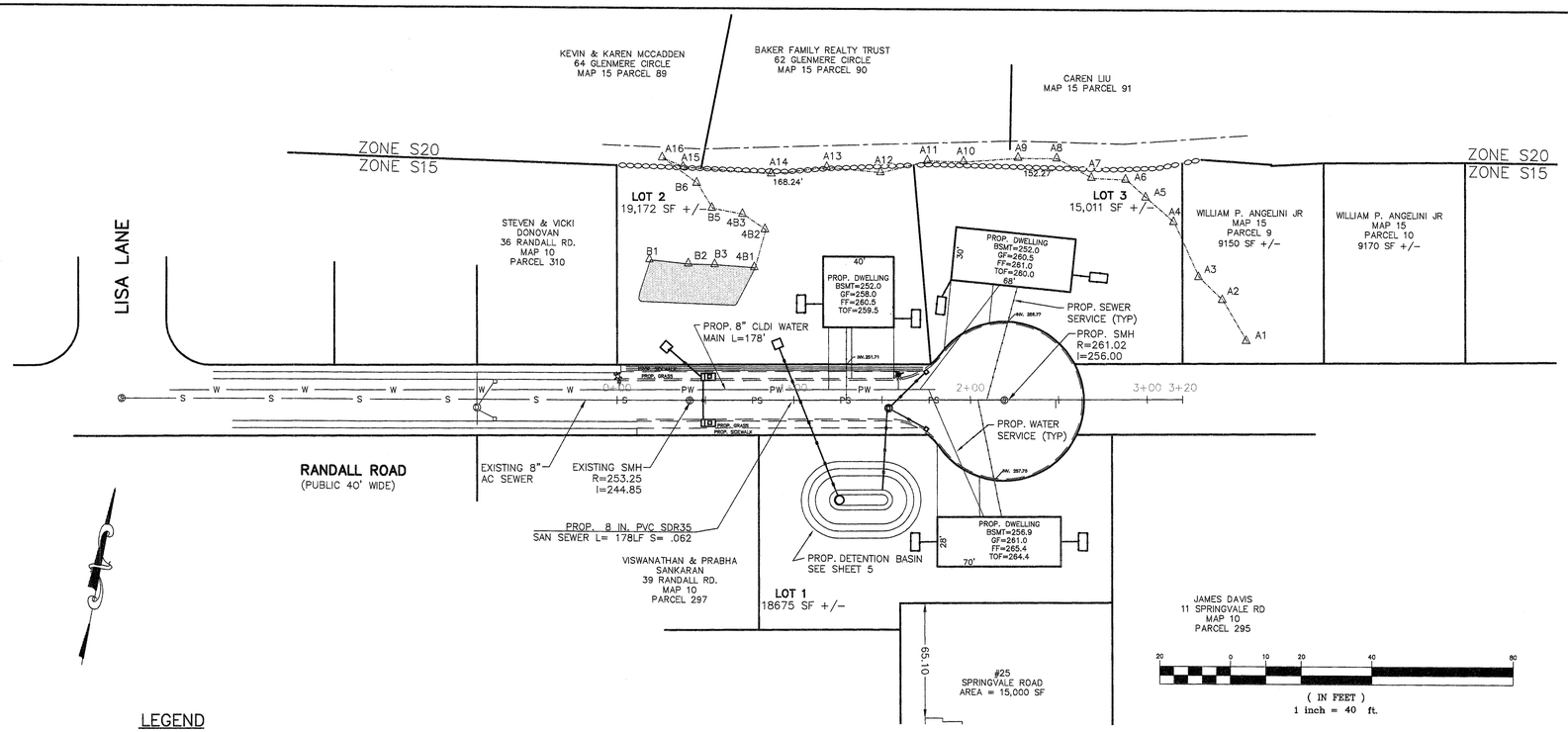

NOTES:

1. PROJECTED SEWER USE
   3 DWELLINGS @ 4 BEDROOMS PER DWELLING = 12 BEDROOMS
   12 BEDROOMS @ 110 GPD = 1,320 GALLONS PER DAY
2. PROJECTED WATER USE
   3 DWELLINGS @ 5 OCCUPANTS PER DWELLING = 15 OCCUPANTS
   15 OCCUPANTS @ 75 GPD = 1,125 GALLONS PER DAY

MATERIAL NOTES:

1. DRAIN PIPE AND FITTING MATERIAL SHALL BE HANCOR HIQ HIGH DENSITY POLYETHYLENE AS MANUFACTURED BY HANCOR, INC. FINDLAY, OHIO OR APPROVED EQUAL.
2. DRAIN PIPE SHALL BE 12 INCH DIAMETER UNLESS OTHERWISE NOTED.
3. WATER MAIN SHALL BE CLASS 150, 8" DIAMETER CEMENT LINED DUCTILE IRON.
4. SEWER SERVICES SHALL BE 4 INCH DIAMETER SDR 35.
5. TELEPHONE AND CABLE CONDUIT SHALL BE UNDERGROUND AND CONSTRUCTED IN THE SAME TRENCH AS THE ELECTRICAL CONDUIT.

LEGEND

EXISTING CONTOUR	100
EXISTING SEWER LINE	S
EXISTING WATER LINE	W
EXISTING DRAIN LINE	D
PROPOSED 8" CLDI WATER LINE	PW
PROPOSED 12" DRAIN LINE	PD
PROPOSED 8 " SEWER LINE	PS
EDGE OF WETLANDS	
PROPOSED ELEC,TEL,CABLE	
LOT FRONTAGE	((100.00))
EXISTING FIRE HYDRANT	
PROPOSED FIRE HYDRANT	
INFILTRATION CHAMBER	
TREE BOX FILTER	TB
PROP. EROSION CONTROL	
PROPOSED TREE	

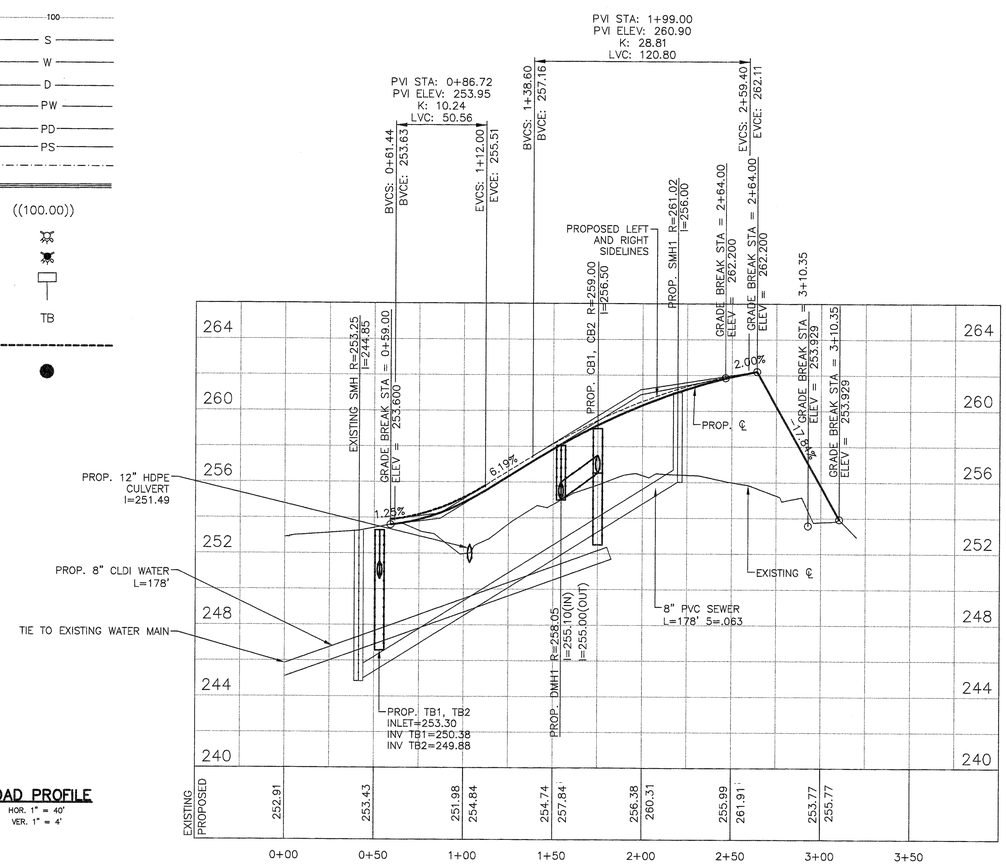

ROAD PROFILE

HOR. 1" = 40'
VER. 1" = 4'

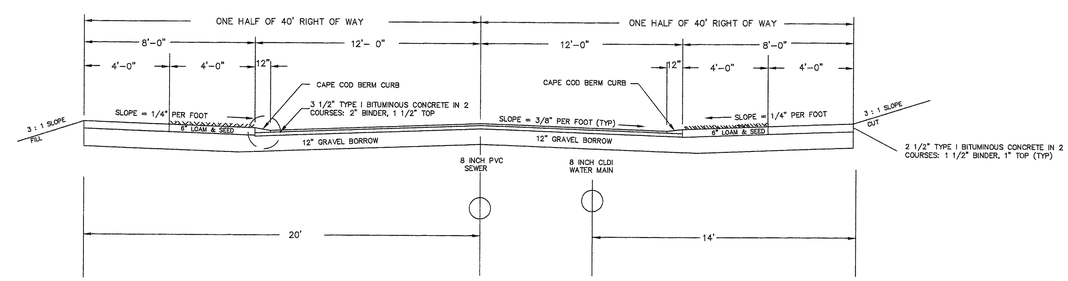

PROPOSED STREET CROSS SECTION

FACING WEST
NOT TO SCALE

TOWN OF READING COMMUNITY
PLANNING & DEVELOPMENT COMMISSION

DATE

JOB#373-572

SH. 6 OF 8

DATE	BY	REVISION

DEFINITIVE SUBDIVISION PLAN
ROADWAY AND UTILITY PLAN
RANDALL ROAD EXTENSION
READING, MA 01867

COMMONWEALTH OF MASSACHUSETTS
LIONEL F. MCQUEEKIN JR.
No. 31262
REGISTERED PROFESSIONAL ENGINEER

SCALE: 1"=40'

DATE: SEPT 26, 2016

Prepared For:
MG Hall Contractors
286 Park Street
North Reading, MA 01923

JM Associates
325 Main Street
N. Reading, MA 01864
978-664-6668
www.jmassociateseng.com

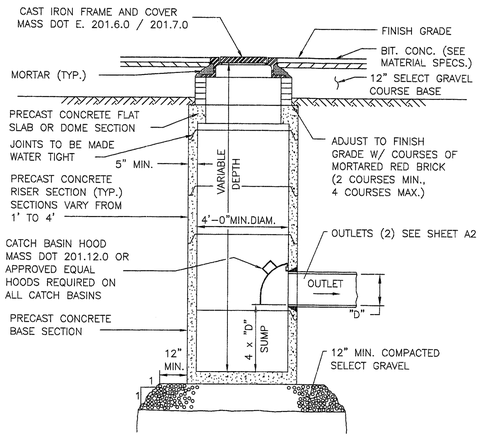

DEEP SUMP CATCH BASIN DETAIL

SCALE: N.T.S

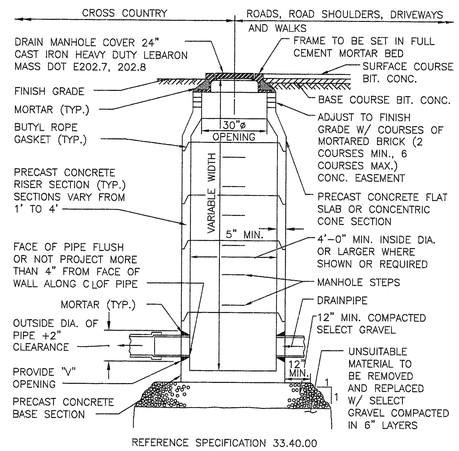

TYPICAL DRAIN MANHOLE DETAIL

SCALE: N.T.S

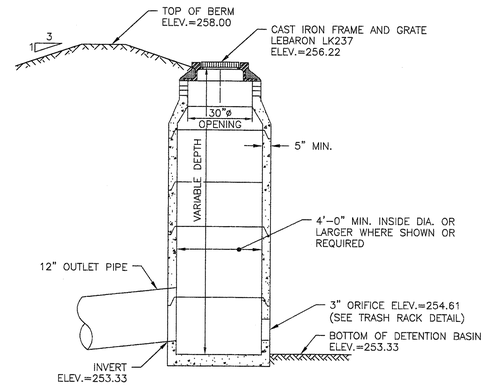

TYPICAL CONTROL STRUCTURE DETAIL

SCALE: N.T.S

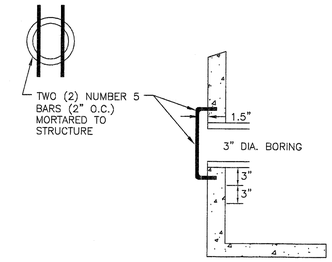

TRASH RACK DETAIL

SCALE: N.T.S

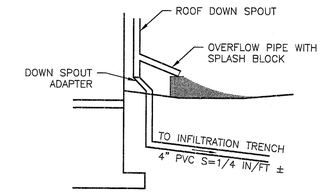

DOWNSPOUT OVERFLOW DETAIL

SCALE: N.T.S

INFILTRATION CHAMBER ELEVATION SCHEDULE						
	1A	1B	2A	2B	3A	3B
PROPOSED FINISH GRADE	260.00	261.05	255.00	256.00	258.00	254.64
BOTTOM OF STONE	256.83	258.96	252.00	253.00	254.96	252.09
ESHGW	254.83	256.50	247.42	251.00	252.08	250.09

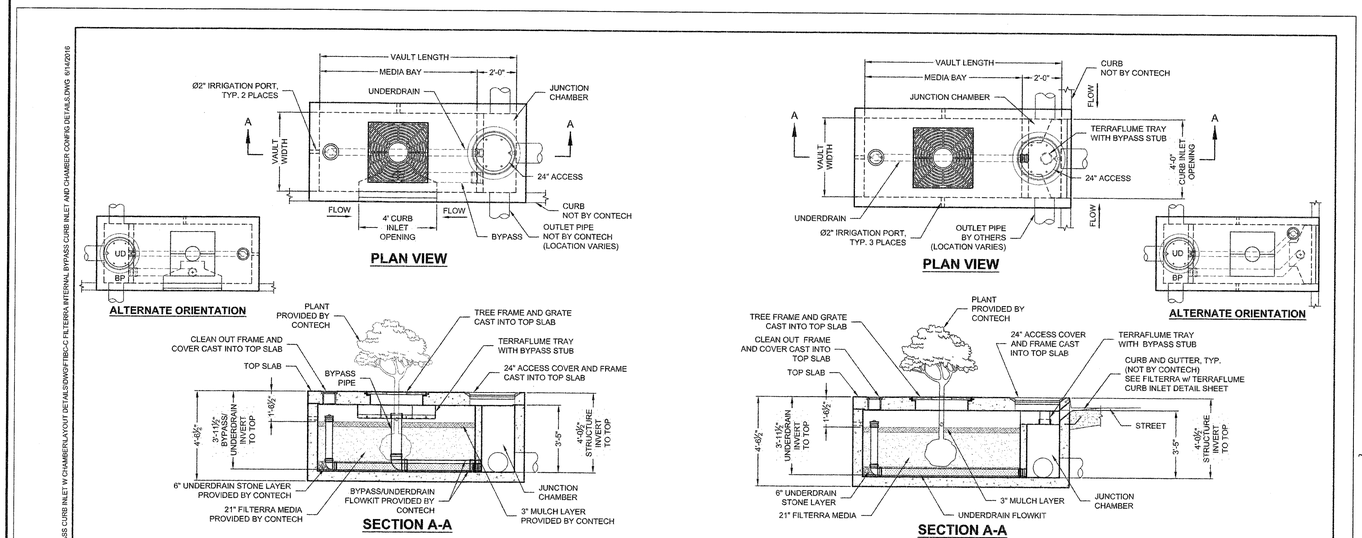

FTIBC-C LONG SIDE CURB INLET							
DESIGNATION (LONG SIDE)	SIZE (MEDIA BAY)	VAULT LENGTH	VAULT WIDTH	MAX. BYPASS PIPE SIZE	MAX. BYPASS FLOW (CFS)	UNDERDRAIN PIPE DIA. (PERF.)	TREE GRATE QTY. & SIZE
FTIBC-C0404 LS	4' x 4'	6'-0"	4'-0"	8" SDR 35	1.42	4" SDR 35	(1) 3' x 3'
FTIBC-C0604	6' x 4'	8'-0"	4'-0"	8" SDR 35	1.89	4" SDR 35	(1) 3' x 3'
FTIBC-C0606 LS	6' x 6'	6'-0"	6'-0"	10" SDR 35	2.37	4" SDR 35	(1) 3' x 3'
FTIBC-C0804	8' x 4'	10'-0"	4'-0"	8" SDR 35	1.89	4" SDR 35	(1) 3' x 3'
FTIBC-C0806	8' x 6'	10'-0"	6'-0"	10" SDR 35	2.37	4" SDR 35	(1) 4' x 4'
FTIBC-C1006	10' x 6'	12'-0"	6'-0"	10" SDR 35	2.37	6" SDR 35	(1) 4' x 4'
FTIBC-C1204	12' x 4'	14'-0"	4'-0"	8" SDR 35	1.89	4" SDR 35	(2) 3' x 3'
FTIBC-C1206	12' x 6'	14'-0"	6'-0"	10" SDR 35	2.37	6" SDR 35	(2) 4' x 4'
FTIBC-C1307	13' x 7'	15'-0"	7'-0"	10" SDR 35	2.37	6" SDR 35	(2) 4' x 4'

INTERNAL PIPE CONFIGURATION MAY VARY DEPENDING ON VAULT SIZE

FTIBC-C SHORT SIDE CURB INLET							
DESIGNATION (SHORT SIDE)	SIZE (MEDIA BAY)	VAULT LENGTH	VAULT WIDTH	MAX. BYPASS PIPE SIZE	MAX. BYPASS FLOW (CFS)	UNDERDRAIN PIPE DIA. (PERF.)	TREE GRATE QTY. & SIZE
FTIBC-C0404 SS	4' x 4'	6'-0"	4'-0"	6" SDR 35	1.42	4" SDR 35	(1) 3' x 3'
FTIBC-C0406	4' x 6'	8'-0"	4'-0"	8" SDR 35	1.89	4" SDR 35	(1) 3' x 3'
FTIBC-C0408	4' x 8'	10'-0"	4'-0"	8" SDR 35	1.89	4" SDR 35	(1) 3' x 3'
FTIBC-C0412	4' x 12'	14'-0"	4'-0"	8" SDR 35	1.89	4" SDR 35	(2) 3' x 3'
FTIBC-C0606 SS	6' x 6'	8'-0"	6'-0"	10" SDR 35	2.37	4" SDR 35	(1) 3' x 3'
FTIBC-C0608	6' x 8'	10'-0"	6'-0"	10" SDR 35	2.37	4" SDR 35	(1) 4' x 4'
FTIBC-C0610	6' x 10'	12'-0"	6'-0"	10" SDR 35	2.37	6" SDR 35	(1) 4' x 4'
FTIBC-C0612	6' x 12'	14'-0"	6'-0"	10" SDR 35	2.37	6" SDR 35	(2) 4' x 4'
FTIBC-C0713	7' x 13'	15'-0"	7'-0"	10" SDR 35	2.37	6" SDR 35	(2) 4' x 4'

INTERNAL PIPE CONFIGURATION MAY VARY DEPENDING ON VAULT SIZE

* DIMENSIONS MAY VARY ±½" DEPENDING ON PRECASTER BUILD CONFIGURATION.

filterra

THIS PRODUCT MAY BE PROTECTED BY ONE OR MORE OF THE FOLLOWING: U.S. PATENT 7,425,262; U.S. PATENT 7,425,263; U.S. PATENT 7,425,264; AND/OR FUTURE PATENTS.

The design and information shown on this drawing is provided as a service to the project owner, engineer and contractor by Contech Engineered Solutions LLC or one of its affiliated companies ("Contech"). Neither this drawing, nor any part thereof, may be used, reproduced or modified in any manner without the prior written consent of Contech. Failure to comply is done at the user's own risk and Contech expressly disclaims any liability or responsibility for such use. If discrepancies between the supplied information upon which the drawing is based and actual field conditions are encountered on site such discrepancies must be reported to Contech immediately for re-evaluation of the design. Contech accepts no liability for designs based on missing, incomplete or inaccurate information supplied by others.

CONTECH® ENGINEERED SOLUTIONS LLC
www.ContechES.com
9025 Centre Pointe Dr., Suite 400, West Chester, OH 45069
800-338-1122 513-645-7000 513-645-7993 FAX

FILTERRA
INTERNAL BYPASS CURB WITH CHAMBER (FTIBC-C)
CONFIGURATION DETAILS

U:\COMMON\CAD\TIEC\TIMBRTS\4 PA TE\2014\0 STANDARD DRW\INNOS\FTIBC-C - INTERNAL BYPASS CURB INLET W CHAMBER\LAYOUT DETAILS\DWG\FTIBC-C FILTERRA INTERNAL BYPASS CURB INLET AND CHAMBER CONFIG DETAILS.DWG 6/14/2016

FILTERRA CHAMBER DETAIL

SCALE: N.T.S

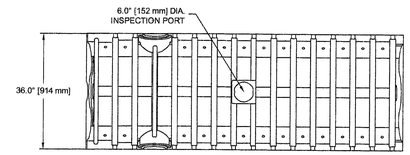

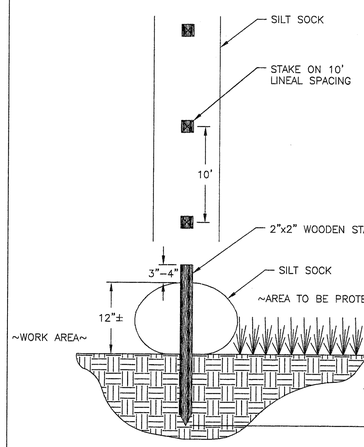

SILT SOCK DETAIL

SCALE: N.T.S

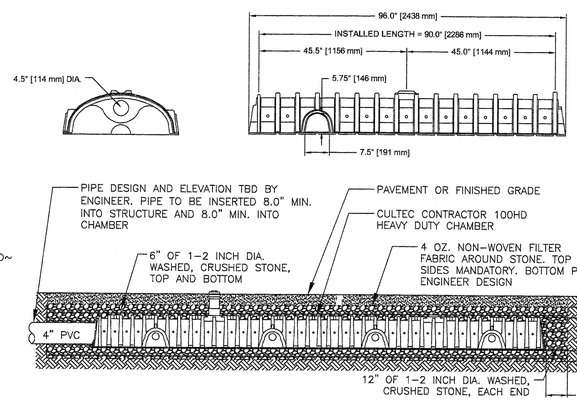

CULTEC CHAMBER (100HD) DETAIL

SCALE: N.T.S

TOWN OF READING COMMUNITY PLANNING & DEVELOPMENT COMMISSION

DATE

DATE	BY	REVISION
8–10–16		

DEFINITIVE SUBDIVISION PLAN
STORMWATER DETAILS
RANDALL ROAD EXTENSION
READING, MA 01867

COMMONWEALTH OF MASSACHUSETTS — JOHN F. McCUSKER JR. — CIVIL — No. 31262 — REGISTERED PROFESSIONAL ENGINEER

SCALE: AS SHOWN

DATE: SEPT. 26, 2016

Prepared For:
MG Hall Contractors
286 Park Street
North Reading, MA 01923

JM Associates
325 Main Street
N. Reading, MA 01864
978–664–6668
www.jmassociateseng.com

JOB#373–572

SH. 7 OF 8

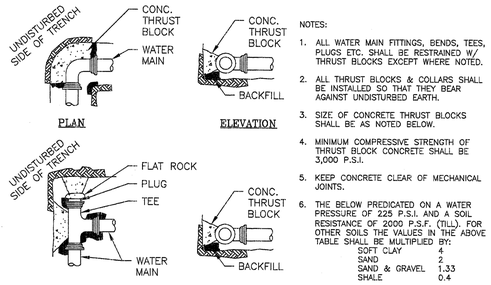

NOTES:

1. ALL WATER MAIN FITTINGS, BENDS, TEES, PLUGS ETC. SHALL BE RESTRAINED W/ THRUST BLOCKS EXCEPT WHERE NOTED.
2. ALL THRUST BLOCKS & COLLARS SHALL BE INSTALLED SO THAT THEY BEAR AGAINST UNDISTURBED EARTH.
3. SIZE OF CONCRETE THRUST BLOCKS SHALL BE AS NOTED BELOW.
4. MINIMUM COMPRESSIVE STRENGTH OF THRUST BLOCK CONCRETE SHALL BE 3,000 P.S.I.
5. KEEP CONCRETE CLEAR OF MECHANICAL JOINTS.
6. THE BELOW PREDICATED ON A WATER PRESSURE OF 225 P.S.I. AND A SOIL RESISTANCE OF 2000 P.S.F. (TILL). FOR OTHER SOILS THE VALUES IN THE ABOVE TABLE SHALL BE MULTIPLIED BY:

SOFT CLAY	4
SAND	2
SAND & GRAVEL	1.33
SHALE	0.4

MINIMUM THRUST BEARING AREAS

PIPE DIA. (SQ. FT.)	90° BEND (SQ. FT.)	45° BEND (SQ. FT.)	22.5° BEND (SQ. FT.)	TEES, PLUGS, CAPS, AND HYDRANTS (SQ. FT.)
6"	5	3	2	4
8"	8	5	3	6
10"	13	7	4	9
12"	18	10	5	13

THRUST BLOCK DETAILS

SCALE: N.T.S

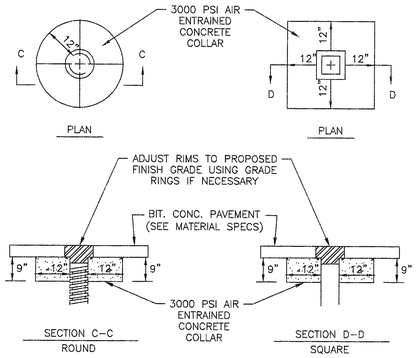

NOTE: ALL GATES TO BE RAISED TO FINISH GRADE AFTER BINDER COURSE OR LEVELING COURSE PAVEMNET HAS BEEN PLACED.

WATER GATE BOX DETAIL

SCALE: N.T.S

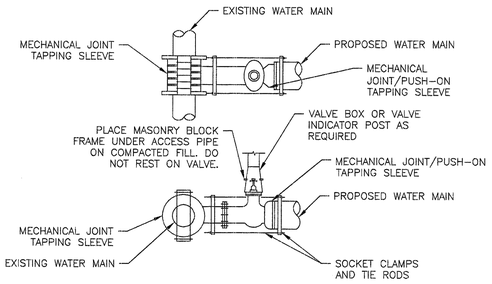

TAPPING SLEEVE AND VALVE DETAIL

SCALE: N.T.S

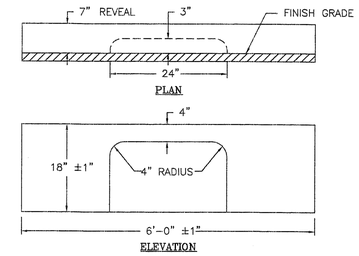

TYPICAL GRANITE CURB INLET DETAIL

SCALE: N.T.S

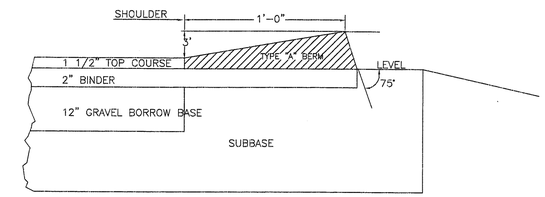

BITUMINOUS CONCRETE BERM–TYPE "A"

SCALE: N.T.S

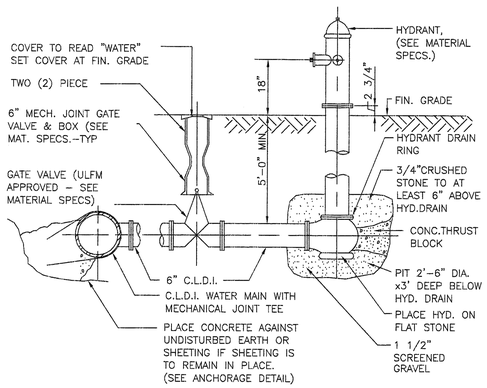

FIRE HYDRANT DETAIL

SCALE: N.T.S

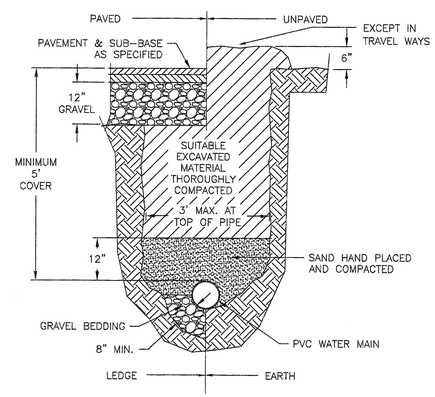

TYPICAL WATER TRENCH DETAIL

SCALE: N.T.S

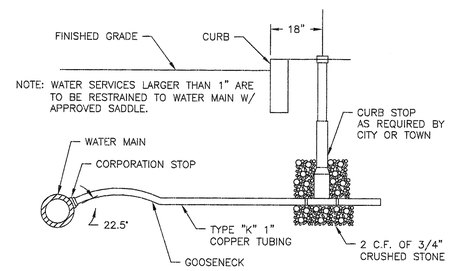

TYP. WATER SERVICE CONNECTION

SCALE: N.T.S

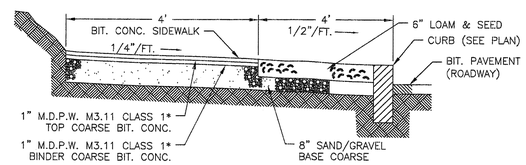

TYPICAL BITUMINOUS CONCRETE SIDEWALK DETAIL

SCALE: N.T.S

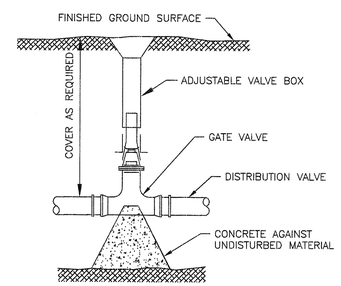

GATE VALVE

SCALE: N.T.S

MANHOLES SHALL HAVE A BRICK PAVED SHELF AND INVERT, CONSTRUCTED TO CONFORM TO THE SIZE OF PIPE AND FLOW. AT CHANGES IN DIRECTION, THE INVERTS SHALL BE LAID OUT IN CURVES OF THE LONGEST RADIUS POSSIBLE TANGENT TO THE CENTER LINE OF THE SEWER PIPES. SHELVES SHALL BE CONSTRUCTED TO THE ELEVATION OF THE HIGHEST PIPE CROWN AND SLOPE TO DRAIN TOWARD THE FLOWING THROUGH CHANNEL. UNDERLAYMENT OF INVERT AND SHELF SHALL CONSIST OF CEMENT CONCRETE OR BRICK IN MORTAR.

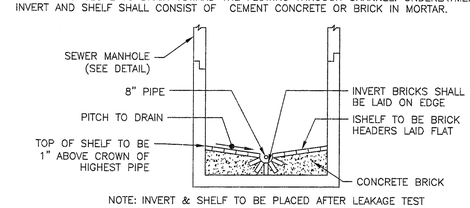

NOTE: INVERT & SHELF TO BE PLACED AFTER LEAKAGE TEST

TYP. BRICK INVERT SECTION FOR SEWER MANHOLES

SCALE: N.T.S

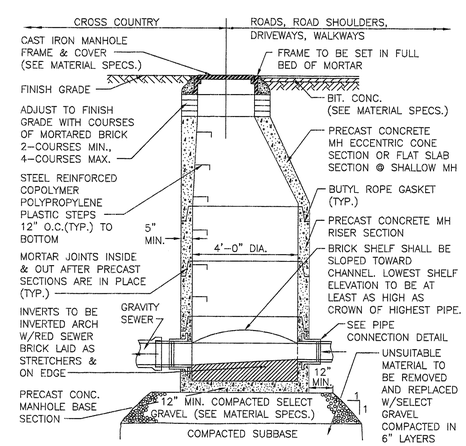

TYPICAL SEWER MANHOLE DETAIL

SCALE: N.T.S

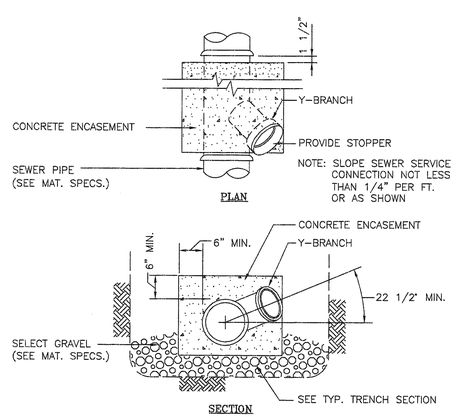

WYE BRANCH FOR PIPE SERVICE CONNECTION DETAIL

SCALE: N.T.S

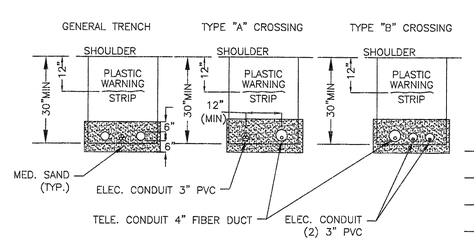

*LOCATION OF UNDERGROUND UTILITIES TO BE DETERMINED BY ELECTRIC COMPANY

CROSS SECTIONS OF COMBINED ELEC. & TELE. INSTALLATION

SCALE: N.T.S

TOWN OF READING COMMUNITY PLANNING & DEVELOPMENT COMMISSION

DATE

DATE	BY	REVISION
8–10–16		

DEFINITIVE SUBDIVISION PLAN
MISCELLANEOUS DETAILS
RANDALL ROAD EXTENSION
READING, MA 01867

COMMONWEALTH OF MASSACHUSETTS — JOHN P. McCLUSKIN Jr. — CIVIL — No. 31262 — REGISTERED PROFESSIONAL ENGINEER

SCALE: AS SHOWN

DATE: SEPT. 06, 2016

Prepared For:
MG Hall Contractors
286 Park Street
North Reading, MA 01923

JM Associates
325 Main Street
N. Reading, MA 01864
978–664–6668
www.jmassociateseng.com

JOB#373–572

SH. 8 OF 8