RAIL SIZE/POST SPACING REQUIREMENTS

RAIL MATERIAL	MAXIMUM POST SPACING (FT)
4"x10" GRADE DENSE NO. 1	2.7'
6"x10" GRADE NO. 1	5.3'
6"x10" GRADE DENSE NO. 1	6.1'
6"x8" GRADE NO. 1	8.4'
6"x8" GRADE DENSE NO. 1	9.7'

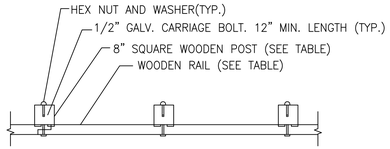

PLAN VIEW

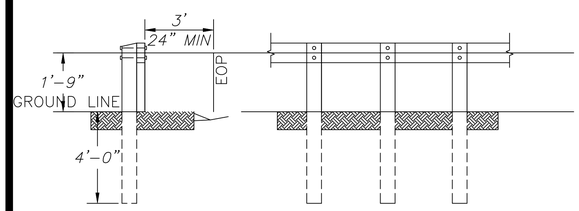

SIDE ELEVATION FRONT ELEVATION

NOTES:
1. POSTS HALL BE 8" SQUARE PRESSURE TREATED DOUGLAS FIR, OR APPROVED EQUAL.
2. RAILS SHALL BE PRESSURE DOUGLAS FIR OR APPROVED EQUAL, JOINTED AT POSTS.

WOODEN GUARD RAIL DETAIL

N.T.S.

PARKING LOT CONSTRUCTION NOTE:

PARKING LOT TO CONSIST OF AN 8" GRAVEL BASE (95% COMPACTION), 2 1/2" BINDER COURSE OF PAVEMENT, & 1 1/2" TOP COURSE OF PAVEMENT

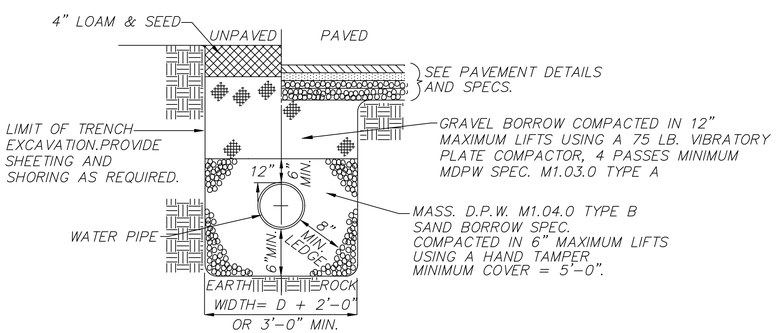

WATER TRENCH

(NOT TO SCALE)

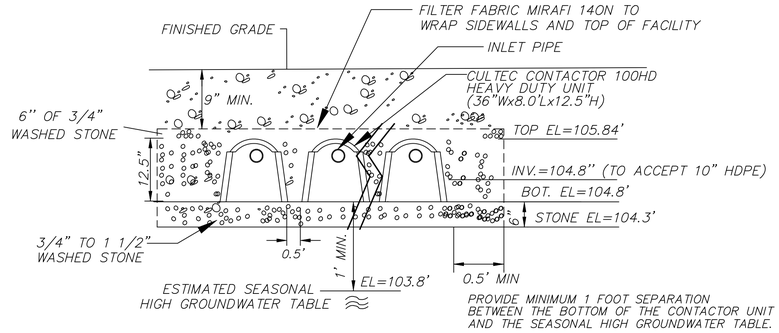

SUBSURFACE INFILTRATION SYSTEM – CROSS SECTION

(NOT TO SCALE)

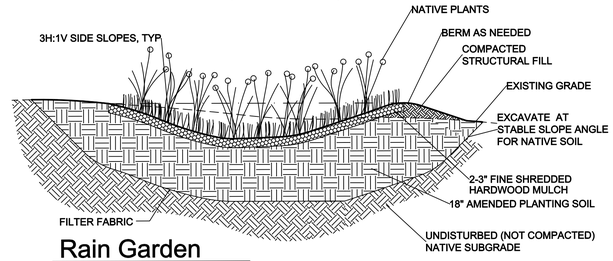

Rain Garden

NTS

NOTE: ALL UNSUITABLE FILL TO BE REMOVED TO NATIVE SOIL. 1 1/2 CRUSHED STONE TO BE PLACED TO FILL VOID AS NEEDED PRIOR TO AMENDED PLANTING SOIL BEING PLACED

RAIN GARDEN PLANTINGS:

- ○ = COMPACT AMERICAN CRANBERRYBUSH (VIBURNUM TRILOBURN BAILEY COMPACT) SPACE 4' ON CENTER, HEIGHT 4 FT (MATURE)
- △ = ANTHONY WATERER SPIREA (SPIREA X BURNALDA) SPACE 3' ON CENTER, HEIGHT 2–3 FT (MATURE)
- □ = STELLA DE ORO DAYLILY (HEMEROCALLIS) SPACE 15' ON CENTER, HEIGHT 15" (MATURE)
- ● = AUTUMN JOY SEDUM (SEDUM X AUTUMN JOY) SPACE 18" ON CENTER, HEIGHT 18"–24" (MATURE)

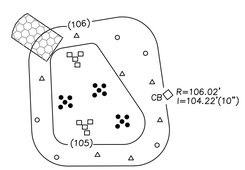

RAIN GARDEN PLANT LAYOUT:

SCALE: 1"=10'±

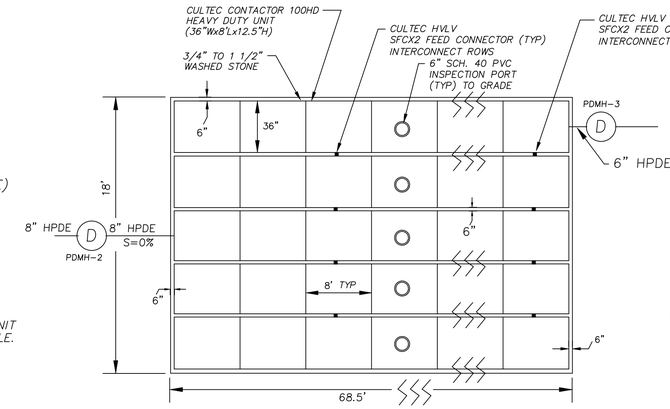

5 ROWS WIDE X 9 ROWS LONG (TOTAL # OF CONTACTOR UNITS=45)

SUBSURFACE INFILTRATION SYSTEM

(NOT TO SCALE)

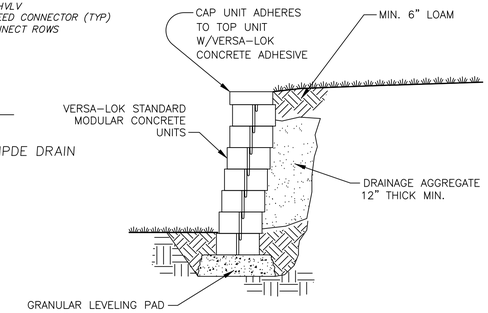

NOTE: FOR WALL SECTIONS GREATER THAN 4 FEET IN HEIGHT A STRUCTURAL ENGINEER IS NEEDED TO DESIGN AND CERTIFY THE WALL. VERSA-LOK BLOCKS WILL STILL BE THE WALL BLOCK USED.

TYPICAL SECTION–UNREINFORCED RETAINING WALL

SCALE: NONE

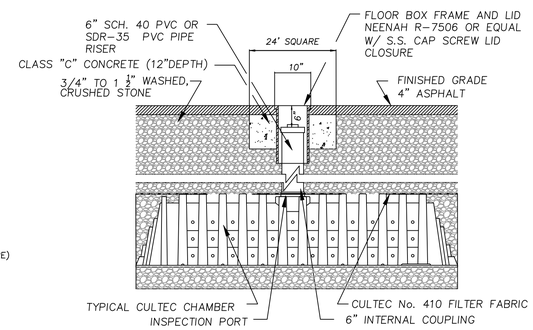

TYPICAL H20 INSPECTION PORT DETAIL

N.T.S.

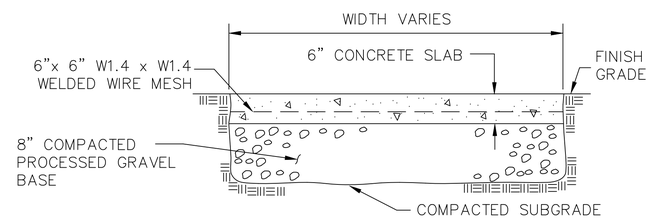

CEMENT CONCRETE DUMPSTER PAD

NOT TO SCALE

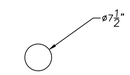

TOP VIEW

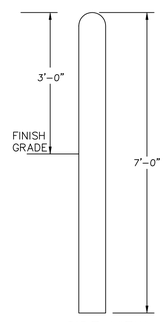

SIDE VIEW

NOTES:
1. CONCRETE: 5,000 PSI MINIMUM AFTER 28 DAYS.
2. STEEL REINFORCEMENT CONCRETE FILLED POLYETHYLENE.
3. AVAILABLE IN 5 COLORS: YELLOW, RED, BLUE, LIGHT & DARK GRANITE.

PRECAST BOLLARD

CROSS–SECTION OF PERVIOUS PAVER INSTALLATION

N.T.S.

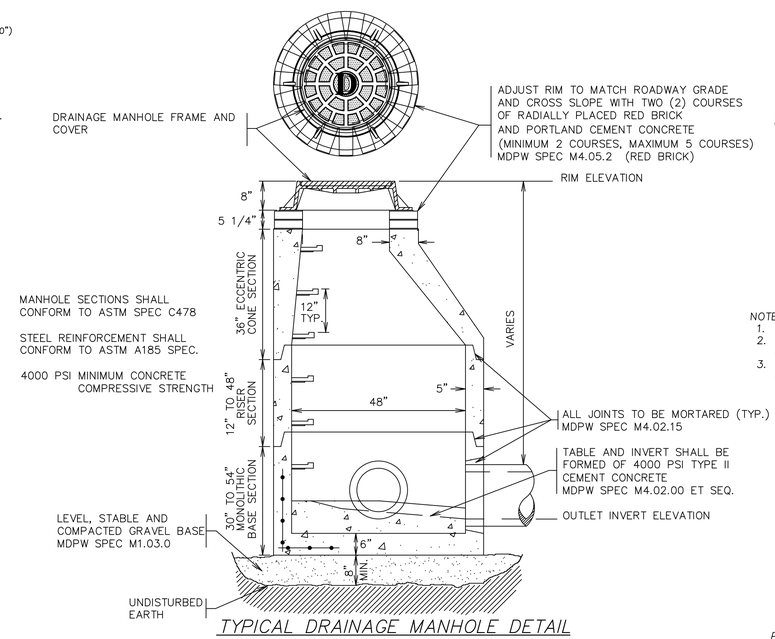

TYPICAL DRAINAGE MANHOLE DETAIL

(NOT TO SCALE)

GRAPHIC SCALE
SCALE: 1"=20'
FEET 20 0 10 20 40

172 WOBURN STREET "SCHOOLHOUSE COMMONS"

CONSTRUCTION DETAILS

LOCATED IN

READING, MASSACHUSETTS

(MIDDLESEX COUNTY)

PREPARED FOR

READING EQUITABLE HOUSING, LLC

NOT TO SCALE DATE: DEC. 9, 2016

PREPARED BY

SULLIVAN ENGINEERING GROUP, LLC

P.O. BOX 2004
WOBURN, MA 01888
(781) 854-8644

SHEET No. 3 OF 3