REGISTRY USE ONLY

APPROVED BY THE
TOWN OF READING
PLANNING BOARD

DATE

REV.	DESCRIPTION	DATE

DRW: | DSG: | CHK:

READING WOODS

in

READING, MA

Prepared For

PULTE HOMES OF
NEW ENGLAND, L.L.C.
115 FLANDERS ROAD
WESTBORO, MA 01581

SEWER + WATER PLAN

Marchionda & Associates, L.P.
Engineering and Planning Consultants
62 Montvale Avenue
Suite I
Stoneham, MA 02180
TEL: (781) 438-6121
FAX: (781) 438-9654
Email: engineering@marchionda.com
Website: www.marchionda.com

DATE: 1/4/11

H:\PROJECTS\487-187\PLAN SET 1-2011\SEW-WTR.DWG

M. & A. NO.: 487-187 | SCALE: 1"=40'

SHEET 13 OF 33

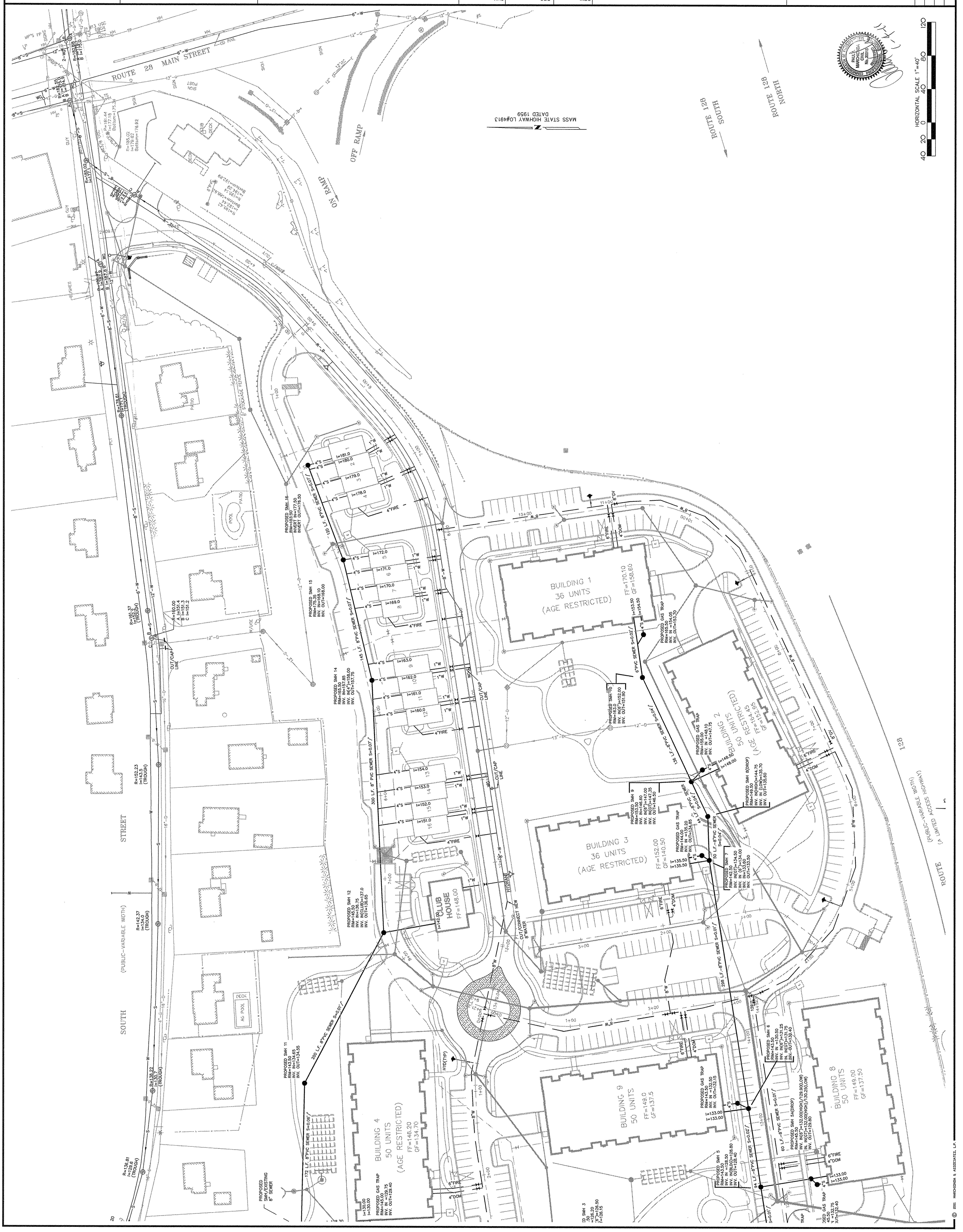

© 2011 MARCHIONDA & ASSOCIATES, LP

SEWER + WATER PLAN

READING WOODS
in
READING, MA

Prepared For

PULTE HOMES OF NEW ENGLAND, L.L.C.
115 FLANDERS ROAD
WESTBORO, MA 01581

Marchionda & Associates, L.P.
Engineering and Planning Consultants
62 Montvale Avenue
Suite 1
Stoneham, MA 02180
TEL: (781) 438-6121
FAX: (781) 438-9654
Email: engineering@marchionda.com
Website: www.marchionda.com

DRW: | DSG: | CHK:

REV.	DESCRIPTION	DATE

APPROVED BY THE TOWN OF READING PLANNING BOARD

_____ DATE

REGISTRY USE ONLY

DATE: 1/4/11
H:\PROJECTS\487-187\PLAN SET 1-2011\SEW-WTR.DWG
M. & A. NO.: 487-187 | SCALE: 1"=40'

HORIZONTAL SCALE 1"=40'
40 20 0 40 80 120

MASS STATE HIGHWAY LO#4913
DATED 1959

ROUTE 128 (PUBLIC-VARIABLE WIDTH) (A LIMITED ACCESS HIGHWAY)

SOUTH STREET (PUBLIC-VARIABLE WIDTH)

PAUL A. MARCHIONDA COMMONWEALTH OF MASSACHUSETTS NO. 30015 REGISTERED PROFESSIONAL ENGINEER

© 2011 MARCHIONDA & ASSOCIATES, LP

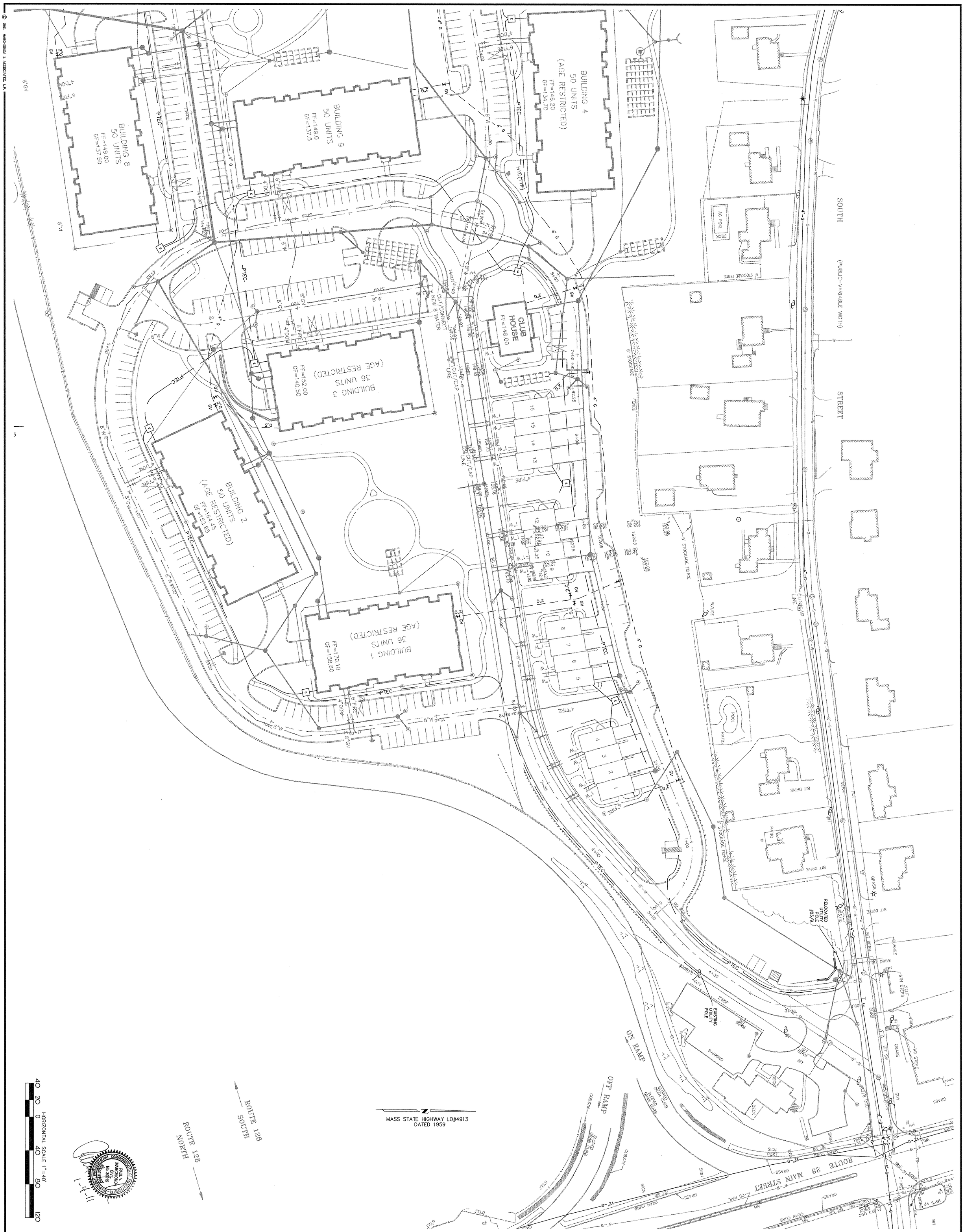

Marchionda & Associates, L.P.
Engineering and Planning Consultants
62 Montvale Avenue
Suite I
Stoneham, MA 02180
TEL: (781) 438-6121
FAX: (781) 438-9654
Email: engineering@marchionda.com
Website: www.marchionda.com

PAUL A. MARCHIONDA CIVIL No. 30015 COMMONWEALTH OF MASSACHUSETTS REGISTERED PROFESSIONAL ENGINEER
1-4-11

DATE: 1/4/11
H:\PROJECTS\487-187\PLAN SET 1-2011\UTIL.DWG
M. & A. NO.: 487-187
SCALE: 1"=40'
SHEET 15 OF 33

MISCELLANEOUS UTILITY PLAN

READING WOODS
in
READING, MA

Prepared For

PULTE HOMES OF NEW ENGLAND, L.L.C.
115 FLANDERS ROAD
WESTBORO, MA 01581

REV.	DESCRIPTION	DATE

DRW: DSG: CHK:

APPROVED BY THE TOWN OF READING PLANNING BOARD

DATE

REGISTRY USE ONLY

© 2011 MARCHIONDA & ASSOCIATES, L.P.

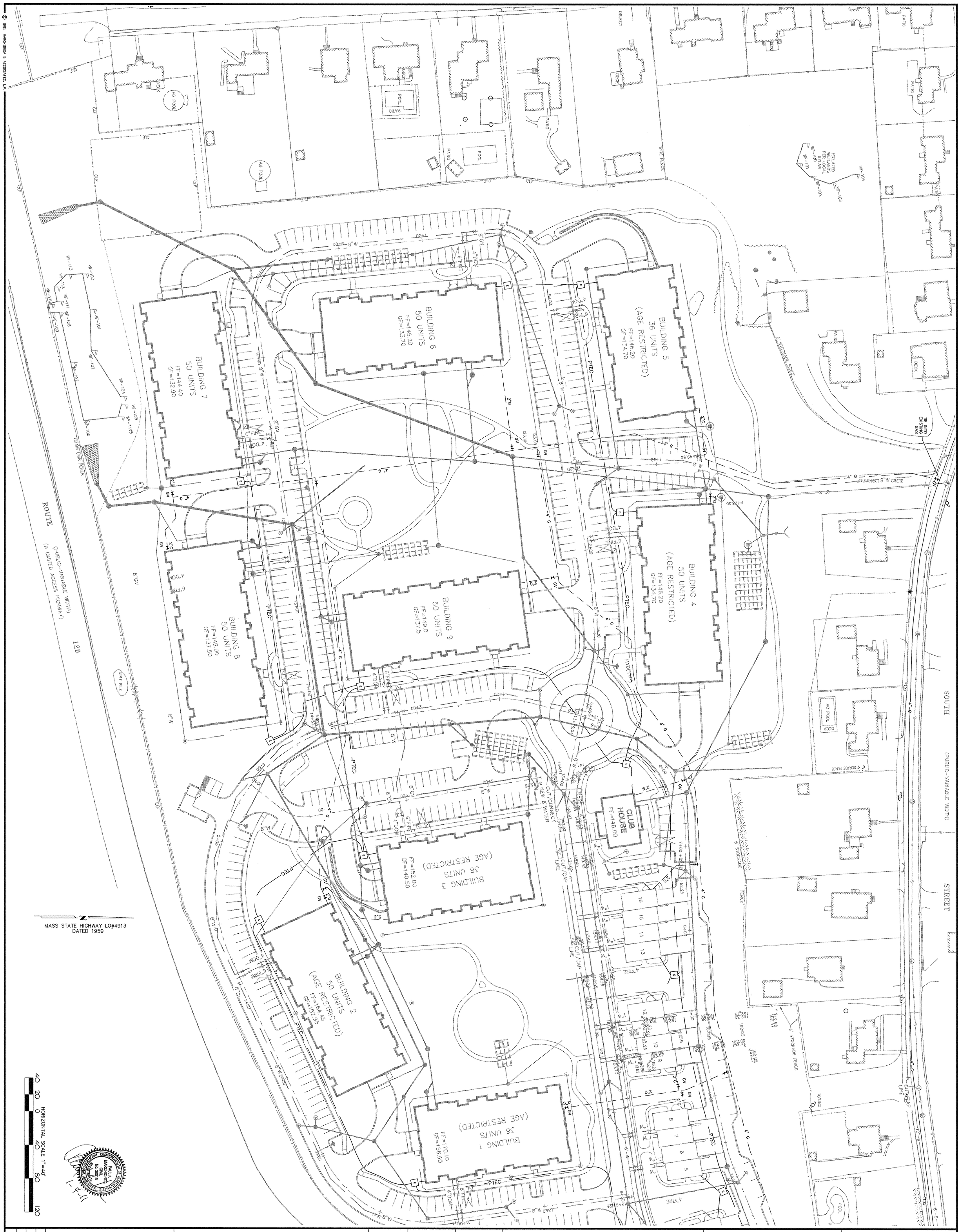

MISCELLANEOUS UTILITY PLAN

READING WOODS

in

READING, MA

Prepared For

PULTE HOMES OF NEW ENGLAND, L.L.C.

115 FLANDERS ROAD
WESTBORO, MA 01581

REV.	DESCRIPTION	DATE

DRW: | DSG: | CHK:

APPROVED BY THE TOWN OF READING PLANNING BOARD

_____ DATE

REGISTRY USE ONLY

Marchionda & Associates, L.P.
Engineering and Planning Consultants
62 Montvale Avenue
Suite 1
Stoneham, MA 02180
TEL: (781) 438-6121
FAX: (781) 438-9654
Email: engineering@marchionda.com
Website: www.marchionda.com

DATE: 1/4/11
H:\PROJECTS\487-187\PLAN SET 1-2011\UTIL.DWG
M. & A. NO.: 487-187 | SCALE: 1"=40'

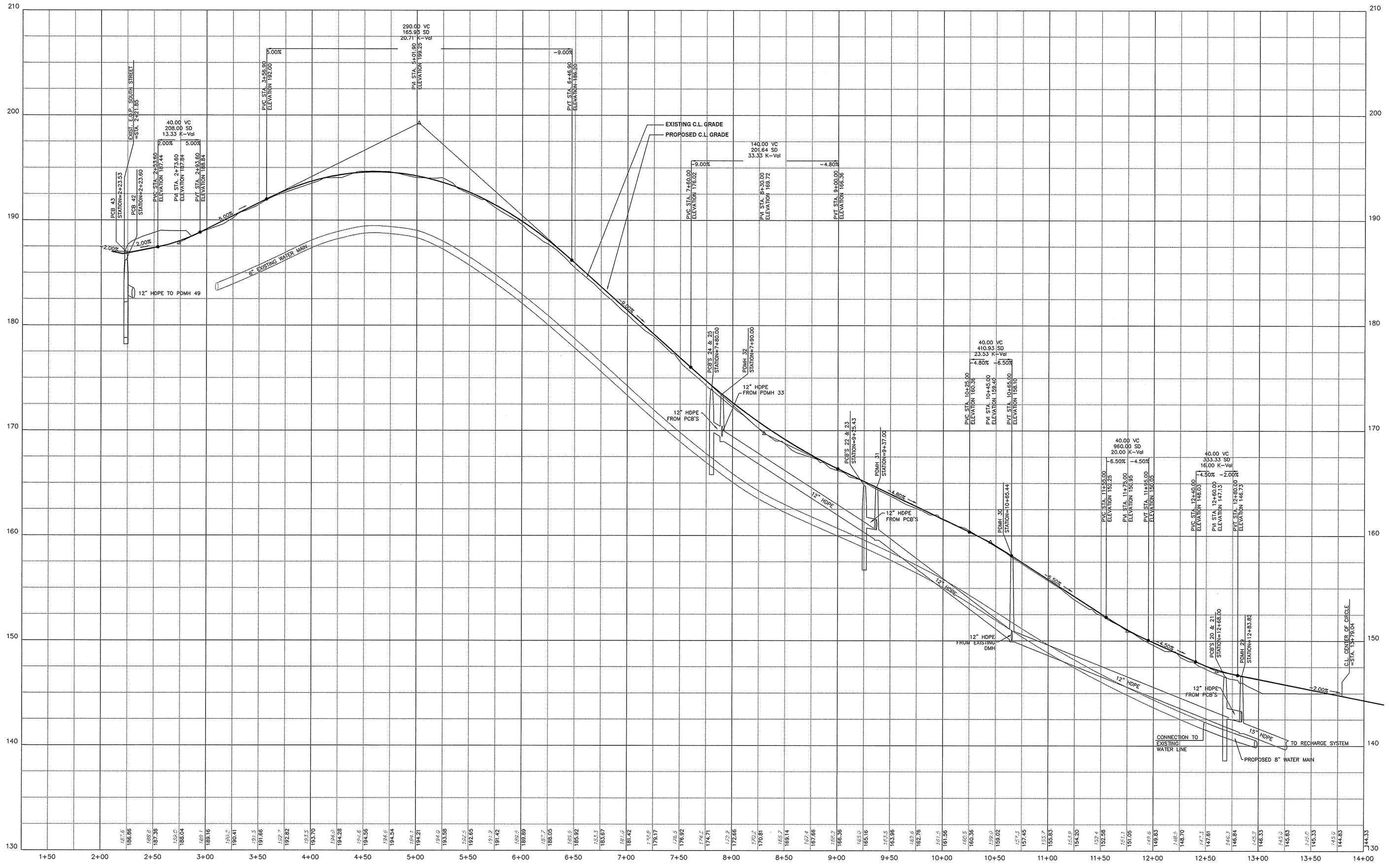

JACOB WAY - SOUTH STREET TO CIRCLE

HORIZONTAL SCALE: 1" = 40'
VERTICALAL SCALE: 1" = 4'

HORIZONTAL SCALE 1"=40'
40 20 0 40 80 120
4 2 0 4 8 12
VERTICAL SCALE 1"=4'

PAUL A. MARCHIONDA CIVIL No. 30015 REGISTERED PROFESSIONAL ENGINEER
1-4-11

REGISTRY USE ONLY

APPROVED BY THE TOWN OF READING PLANNING BOARD

DATE

DRW:	DSG:	CHK:			DESCRIPTION	DATE

DRIVE WAY PROFILES
JACOB WAY
SOUTH STREET TO CIRCLE

READING WOODS
in
READING, MA

Prepared For
PULTE HOMES OF NEW ENGLAND, L.L.C.
115 FLANDERS ROAD
WESTBORO, MA 01581

Marchionda & Associates, L.P.
Engineering and Planning Consultants
62 Montvale Avenue
Suite I
Stoneham, MA 02180
TEL: (781) 438-6121
FAX: (781) 438-9654
Email: engineering@marchionda.com
Website: www.marchionda.com

DATE: 1/4/11
H:\PROJECTS\487-187\PLAN SET 1-2011\PROFILES.DWG
M. & A. NO.: 487-187 | SCALE: AS SHOWN
SHEET 17 OF 33

© 2011 MARCHIONDA & ASSOCIATES, L.P.

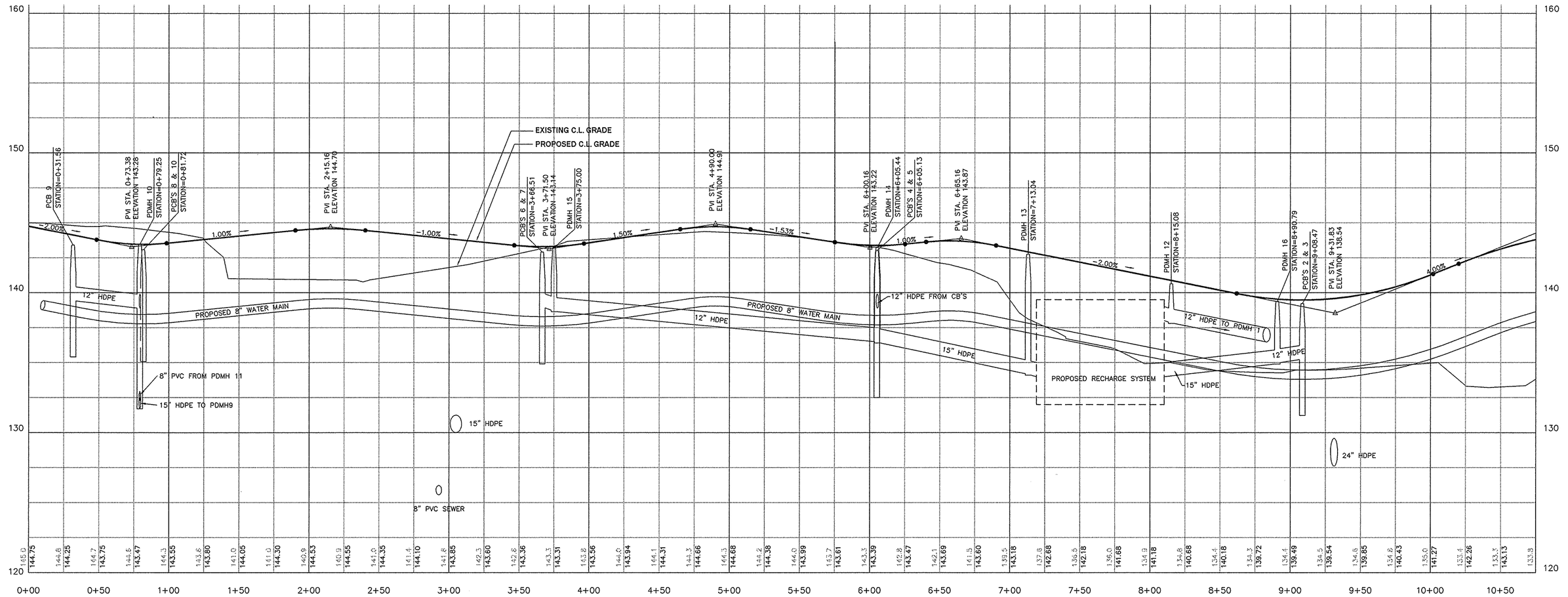

JACOB WAY - CIRCLE TO LEAH WAY

HORIZONTAL SCALE: 1" = 40'
VERTICALAL SCALE: 1" = 4'

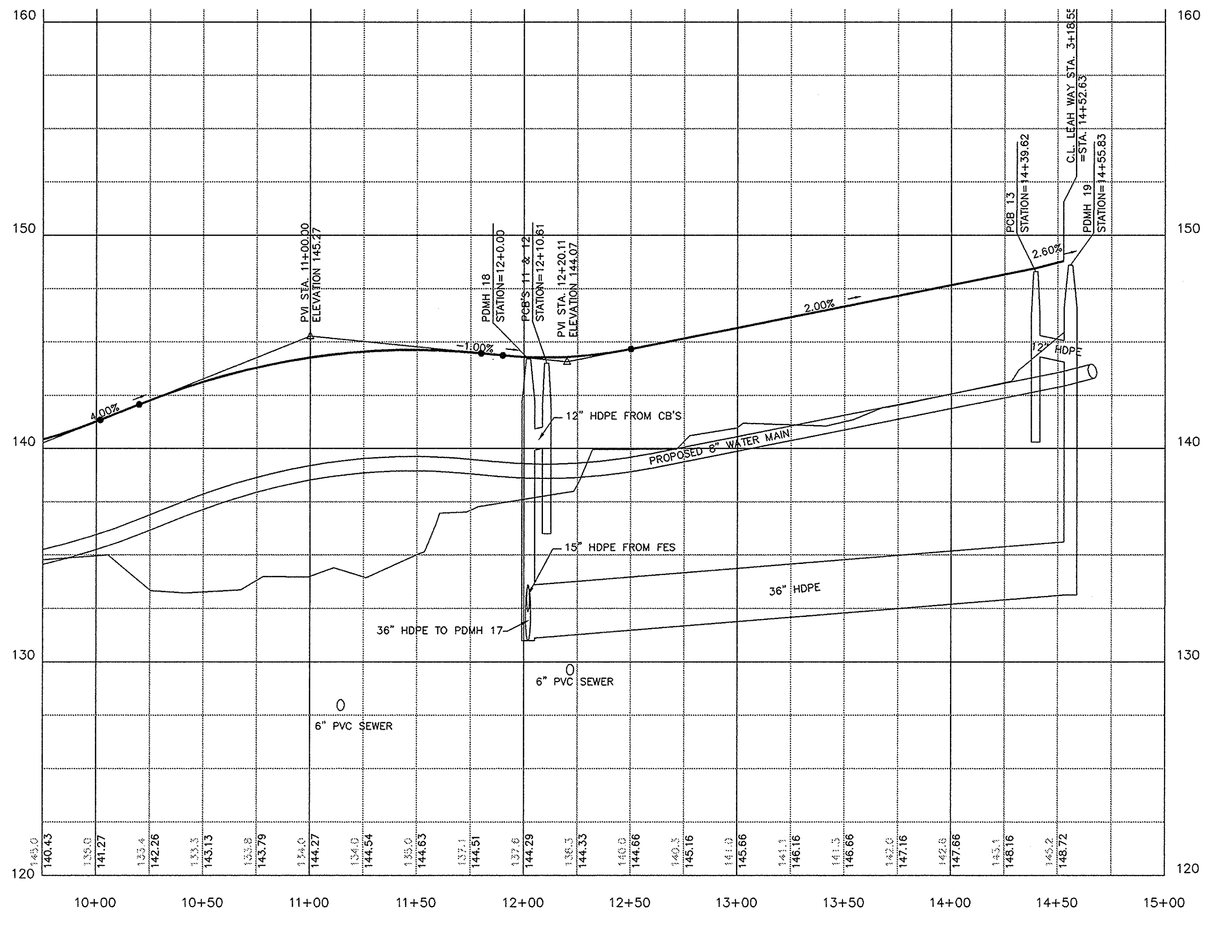

JACOB WAY (CONT.)

HORIZONTAL SCALE: 1" = 40'
VERTICALAL SCALE: 1" = 4'

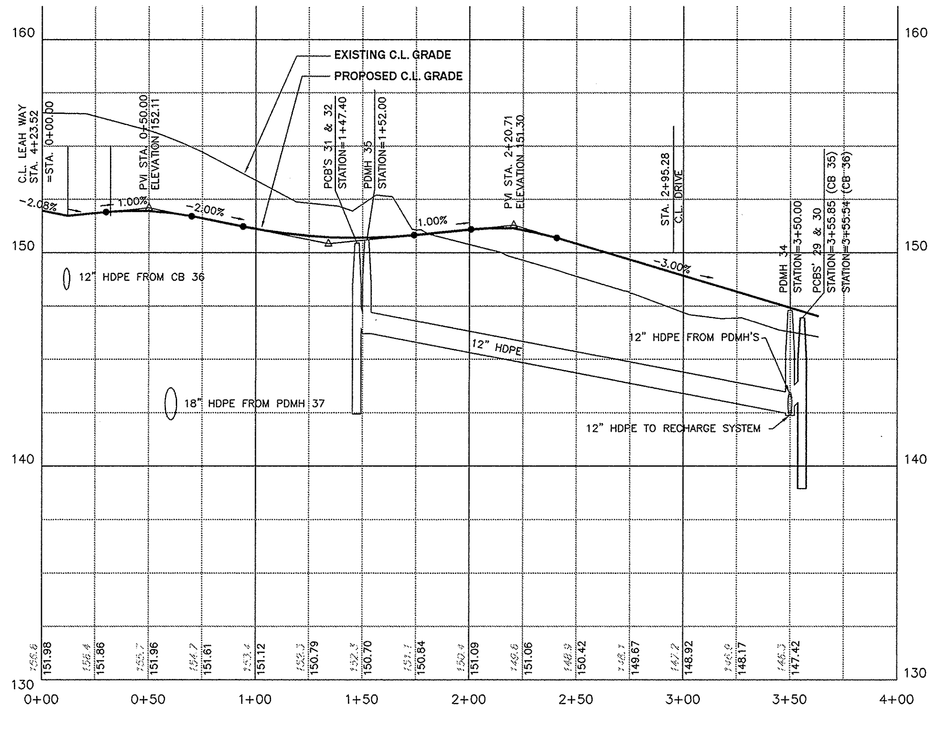

DRIVE BLDG. 3

HORIZONTAL SCALE: 1" = 40'
VERTICALAL SCALE: 1" = 4'

HORIZONTAL SCALE 1"=40'
VERTICAL SCALE 1"=4'

REGISTRY USE ONLY

APPROVED BY THE
TOWN OF READING
PLANNING BOARD

DATE

DRW:	DSG:	CHK:	DESCRIPTION	DATE

DRIVE WAY PROFILES
JACOB WAY
DRIVEWAY BUILDING 3

READING WOODS
in
READING, MA

Prepared For
PULTE HOMES OF
NEW ENGLAND, L.L.C.
115 FLANDERS ROAD
WESTBORO, MA 01581

Marchionda
& Associates, L.P.
Engineering and
Planning Consultants
62 Montvale Avenue
Suite I
Stoneham, MA 02180
TEL: (781) 438-6121
FAX: (781) 438-9654
Email: engineering@marchionda.com
Website: www.marchionda.com

PAUL A. MARCHIONDA CIVIL No. 30015 REGISTERED PROFESSIONAL ENGINEER
1-4-11

DATE: 1/4/11
H:\PROJECTS\487-187\PLAN SET 1-2011\PROFILES.DWG
M. & A. NO.: 487-187 | SCALE: AS SHOWN
SHEET 18 OF 33

© 2011 MARCHIONDA & ASSOCIATES, L.P.

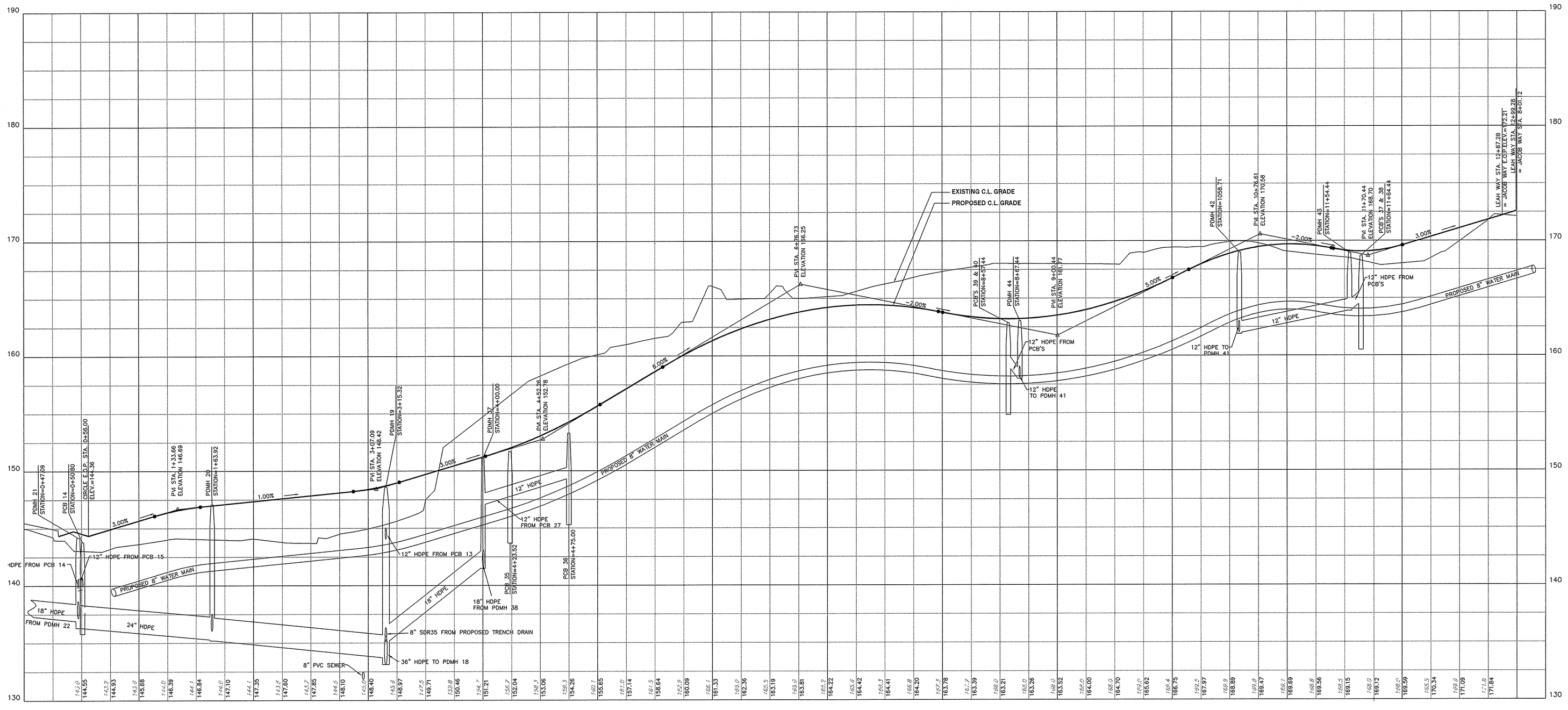

LEAH WAY - CIRCLE TO EXISTING JACOB WAY

HORIZONTAL SCALE: 1" = 40'
VERTICAL SCALE: 1" = 4'

HORIZONTAL SCALE 1"=40'
40 20 0 40 80 120
VERTICAL SCALE 1"=4'
4 2 0 4 8 12

REGISTRY USE ONLY

APPROVED BY THE TOWN OF READING PLANNING BOARD

DATE

DRW:	DSG:	CHK:	DESCRIPTION	DATE

DRIVE WAY PROFILES
LEAH WAY
CIRCLE TO EXISTING JACOB WAY

READING WOODS
in
READING, MA

Prepared For
PULTE HOMES OF NEW ENGLAND, L.L.C.
115 FLANDERS ROAD
WESTBORO, MA 01581

Marchionda & Associates, L.P.
Engineering and Planning Consultants
62 Montvale Avenue
Suite I
Stoneham, MA 02180
TEL: (781) 438-6121
FAX: (781) 438-9654
Email: engineering@marchionda.com
Website: www.marchionda.com

PAUL A. MARCHIONDA CIVIL No. 30015 COMMONWEALTH OF MASSACHUSETTS REGISTERED PROFESSIONAL ENGINEER
1-4-11

DATE: 1/4/11
H:\PROJECTS\487-187\PLAN SET 1-2011\PROFILES.DWG
M. & A. NO.: 487-187
SCALE: AS SHOWN
SHEET 19 OF 33

© 2011 MARCHIONDA & ASSOCIATES, L.P.

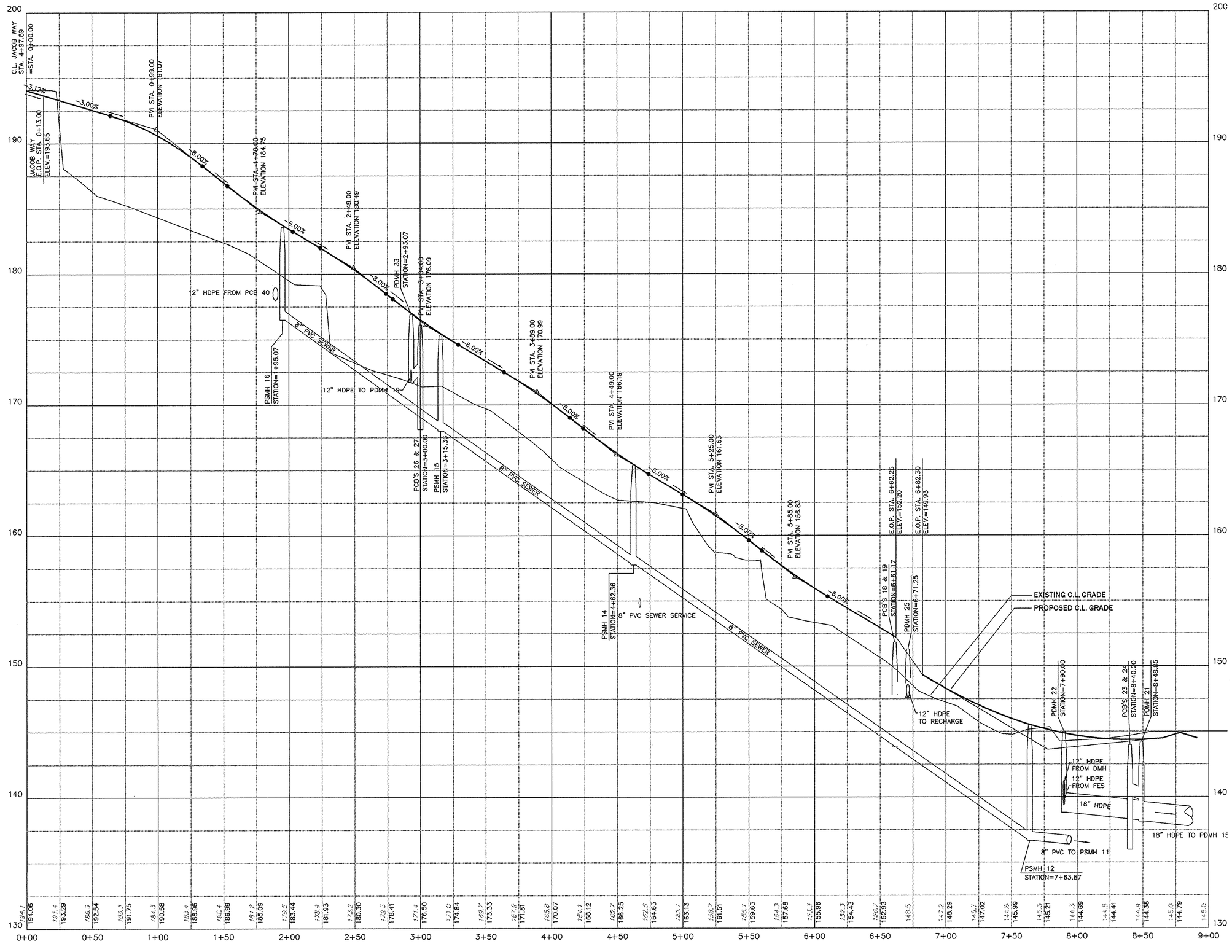

TOWNHOUSE DRIVEWAY + CLUBHOUSE DRIVEWAY

HORIZONTAL SCALE: 1" = 40'
VERTICALAL SCALE: 1" = 4'

HORIZONTAL SCALE 1"=40'
40 20 0 40 80 120
4 2 0 4 8 12
VERTICAL SCALE 1"=4'

REGISTRY USE ONLY

APPROVED BY THE TOWN OF READING PLANNING BOARD

DATE

DRW:	DSC:	CHK:	DESCRIPTION	DATE

DRIVE WAY PROFILES
TOWNHOUSE DRIVEWAY + CLUBHOUSE DRIVEWAY

READING WOODS
in
READING, MA

Prepared For
PULTE HOMES OF NEW ENGLAND, L.L.C.
115 FLANDERS ROAD
WESTBORO, MA 01581

Marchionda & Associates, L.P.
Engineering and Planning Consultants
62 Montvale Avenue
Suite I
Stoneham, MA 02180
TEL: (781) 438-6121
FAX: (781) 438-9654
Email: engineering@marchionda.com
Website: www.marchionda.com

PAUL A. MARCHIONDA CIVIL No. 30015 COMMONWEALTH OF MASSACHUSETTS REGISTERED PROFESSIONAL ENGINEER

1-4-11

DATE: 1/4/11
H:\PROJECTS\487-187\PLAN SET 1-2011\PROFILES.DWG
M. & A. NO.: 487-187 | SCALE: AS SHOWN
SHEET 20 OF 33

© 2011 MARCHIONDA & ASSOCIATES, L.P.

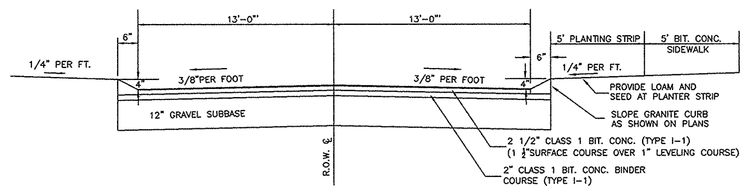

TYPICAL DRIVEWAY CROSS SECTION -JACOB WAY
N.T.S.

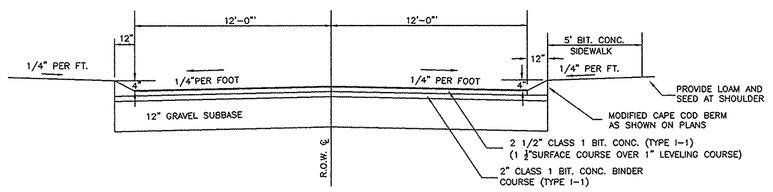

TYPICAL DRIVEWAY CROSS SECTION
N.T.S.

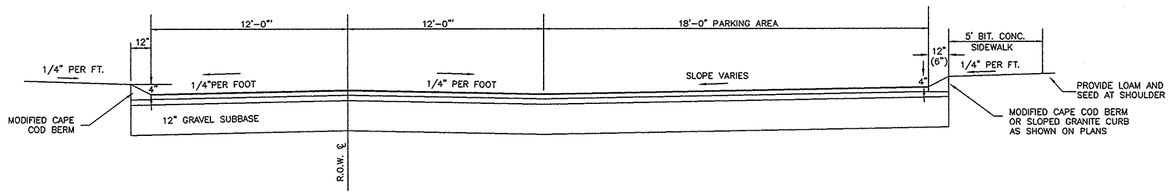

TYPICAL DRIVEWAY CROSS SECTION - WITH PARKING AREA
N.T.S.

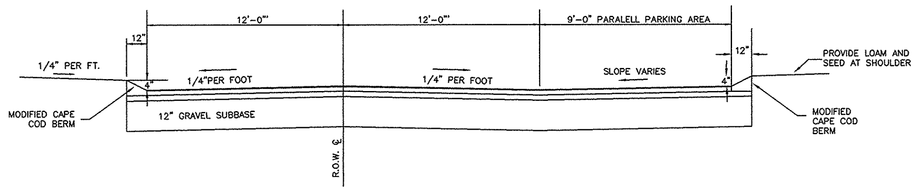

TYPICAL DRIVEWAY CROSS SECTION - WITH PARALELL PARKING AREA
N.T.S.

	A	B
WALKWAY/RAMP	4"	8"
DUMPSTER PAD	6"	12"

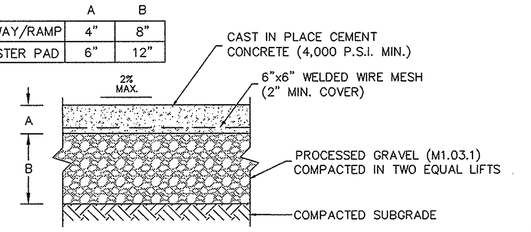

NOTES:
1. CEMENT CONCRETE PAVEMENT TO BE USED FOR LEAD WALKS TO GARDEN BUILDINGS, ACCESSIBLE RAMPS AND DUMPSTER PAD.
2. PROVIDE LIGHT BROOM FINISH PERPENDICULAR TO PEDESTRIAN/TRAFFIC FLOW.
3. PROVIDE 1/2" EXPANSION JOINT WITH PRE-MOULDED FILLER RECESSED 1/2". EXPANSION JOINTS TO BE PROVIDED 8' O.C. MAX. AND WHERE PAVEMENT ABUTS STRUCTURES OR OTHER VERTICAL SURFACES. PROVIDE 2" SMOOTH STRIP ON EACH SIDE OF EXPANSION JOINT.
4. THICKNESSES INDICATE THICKNESS AFTER COMPACTION.
5. CEMENT CONCRETE WALKS TO BE 5' WIDE.

CEMENT CONCRETE PAVEMENT SECTION
N.T.S.

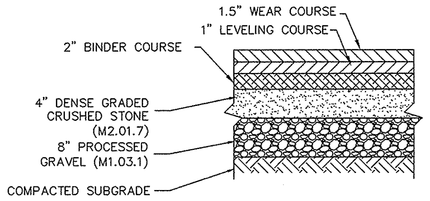

TYPICAL PAVEMENT SECTION - ACCESS DRIVES
N.T.S.

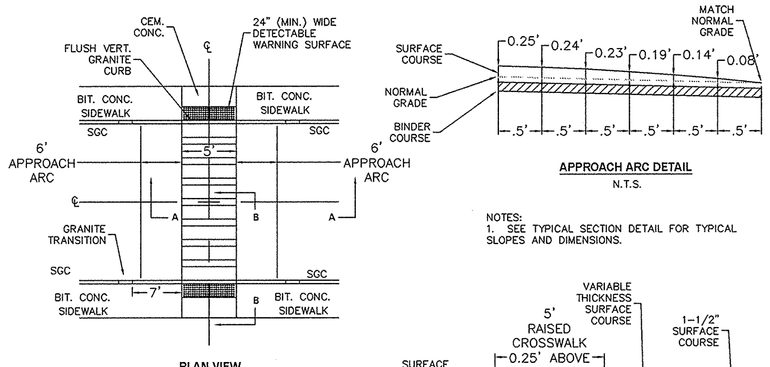

NOTES:
1. SEE TYPICAL SECTION DETAIL FOR TYPICAL SLOPES AND DIMENSIONS.

RAISED CROSSWALK DETAIL
N.T.S.

RAIL SIZE/POST SPACING REQUIREMENTS

RAIL MATERIAL	MAXIMUM POST SPACING (FT)
4"x10" GRADE DENSE NO. 1	2.7'
6"x10" GRADE NO. 1	5.3'
6"x10" GRADE DENSE NO. 1	6.1'
6"x8" GRADE NO. 1	8.4'
6"x8" GRADE DENSE NO. 1	9.7'

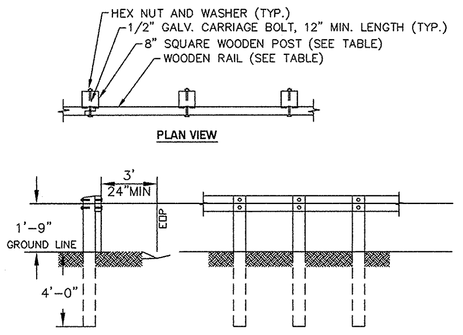

NOTES:
1. POSTS SHALL BE 8" SQUARE PRESSURE TREATED DOUGLAS FIR, OR APPROVED EQUAL.
2. RAILS SHALL BE PRESSURE DOUGLAS FIR OR APPROVED EQUAL, JOINTED AT POSTS.

WOODEN GUARD RAIL DETAIL
N.T.S.

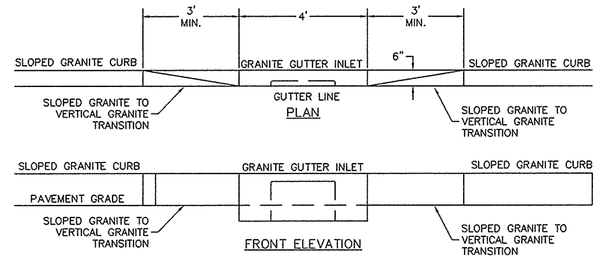

TYPICAL TRANSITION SLOPED GRANITE CURB TO VERTICAL GRANITE GUTTER INLETS
N.T.S.

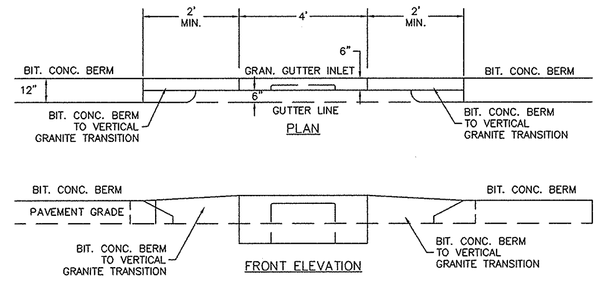

TYPICAL TRANSITION BIT. CONC. BERM TO VERTICAL GRANITE GUTTER INLETS
N.T.S.

NOTE: TRANSITIONS NOT LOCATED AT GUTTER INLETS ARE TO BE MADE IN A SIMILAR FASHION, WITH THE VERTCAL GRANITE TO BE SET BACK 6".

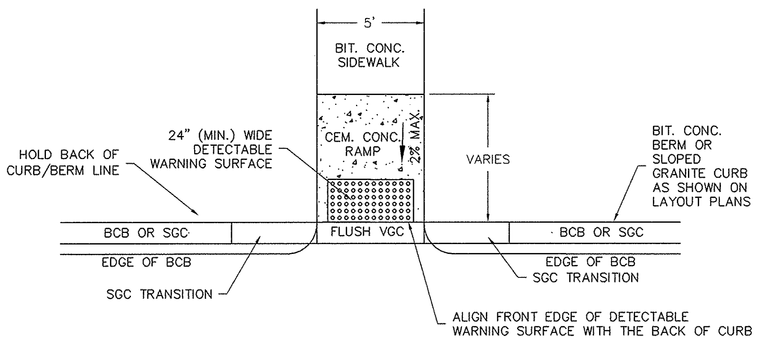

HANDICAP CURB CUT TYPE II
N.T.S.

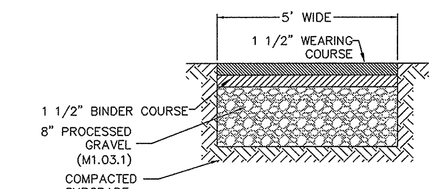

TYPICAL BITUMINOUS CONCRETE SIDEWALK SECTION
N.T.S.

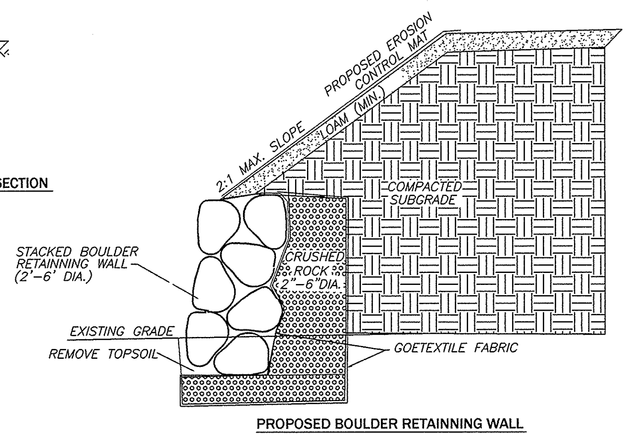

PROPOSED BOULDER RETAINNING WALL
(OPTIONAL FOR NON-STRUCTURAL WALLS)
SCALE: N.T.S.

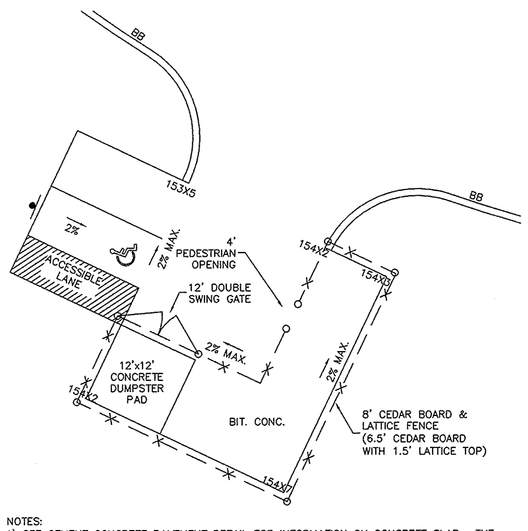

NOTES:
1) SEE CEMENT CONCRETE PAVEMENT DETAIL FOR INFORMATION ON CONCRETE SLAB. THE TRANSITION BETWEEN THE BITUMINOUS PAVEMENT AND CONCRETE SLAB SHALL BE MADE FLUSH SO AS TO CREATE A SMOOTH TRANSITION BETWEEN ADJOINING SURFACES (i.e. NO LIP).
2) WASTE RECEPTACLE AREA TO BE HANDICAPPED ACCESSIBLE (NO CROSS SLOPE >2% AND NO RUNNING SLOPE >8.3%).

RECYCLE AREA DETAIL
N.T.S.

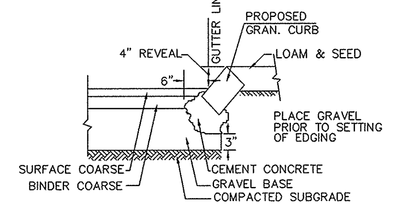

SLOPED GRANITE CURB (SGC) DETAIL
NOT TO SCALE

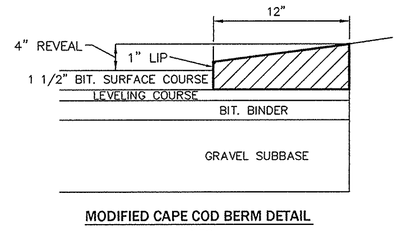

MODIFIED CAPE COD BERM DETAIL
N.T.S.

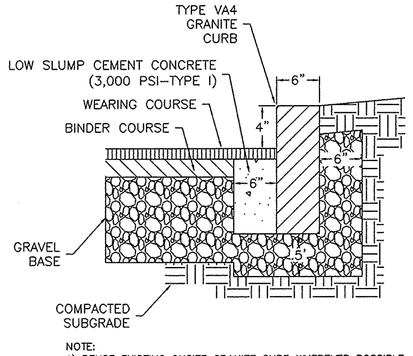

NOTE:
1) REUSE EXISTING ONSITE GRANITE CURB WHEREVER POSSIBLE.

VERTICAL GRANITE CURB DETAIL
NOT TO SCALE

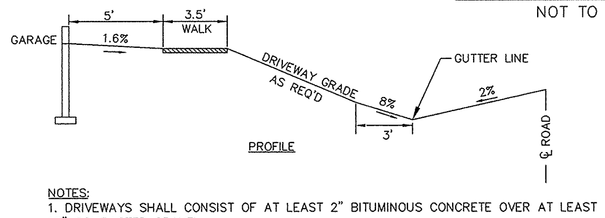

NOTES:
1. DRIVEWAYS SHALL CONSIST OF AT LEAST 2" BITUMINOUS CONCRETE OVER AT LEAST 12" COMPACTED GRAVEL.

TYPICAL DRIVEWAY DETAIL AT TOWNHOUSE UNITS
N.T.S.

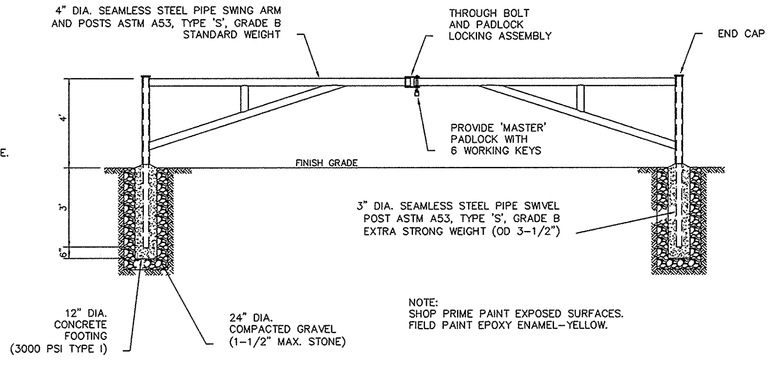

NOTE:
SHOP PRIME PAINT EXPOSED SURFACES. FIELD PAINT EPOXY ENAMEL-YELLOW.

EMERGENCY ACCESS GATE
N.T.S.

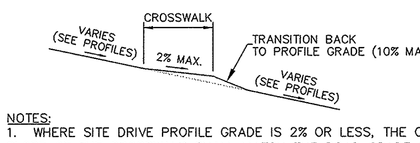

NOTES:
1. WHERE SITE DRIVE PROFILE GRADE IS 2% OR LESS, THE CROSS SLOPE OF THE CROSSWALK SHALL MATCH THE ROAD GRADE (I.E. NO ADJUSTMENT NECESSARY).
2. THIS DETAIL APPLIES TO ALL CROSSWALKS WITHIN THE PROPOSED DEVELOPMENT.

TYPICAL CROSSWALK SECTION
N.T.S.

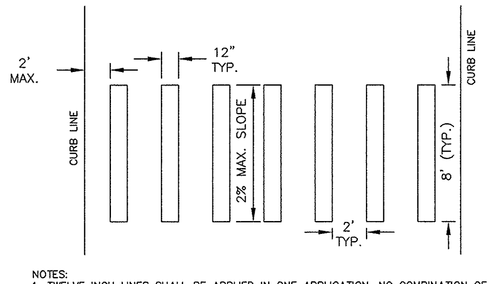

NOTES:
1. TWELVE INCH LINES SHALL BE APPLIED IN ONE APPLICATION, NO COMBINATION OF LINES (IE. TWO - SIX INCH LINES) WILL BE ACCEPTED.
2. CROSSWALK LINES TO BE PARALLEL TO THE CURBLINE AND TO BE THE UNIFORMLY SPACED AND ALIGNED.
3. CROSSWALK SIDESLOPE NOT TO EXCEED 2%.

CROSSWALK
N.T.S.

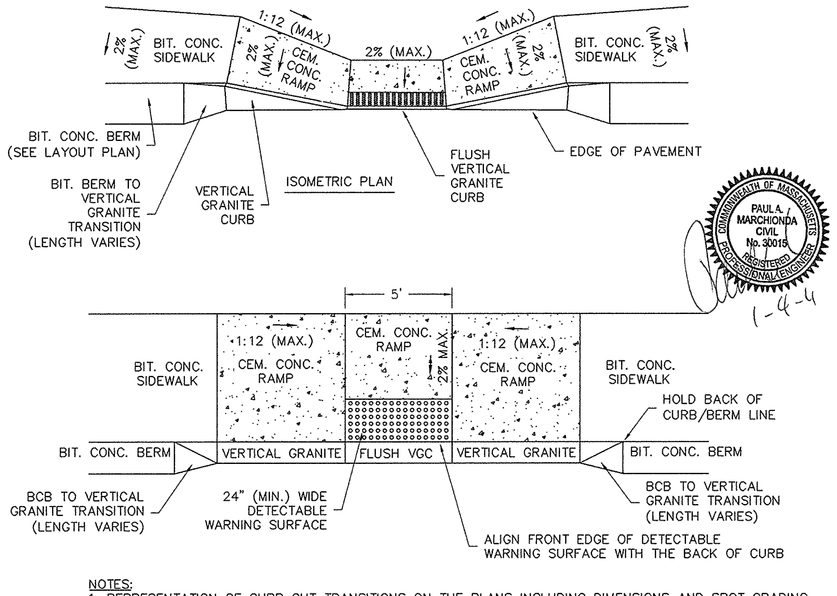

NOTES:
1. REPRESENTATION OF CURB CUT TRANSITIONS ON THE PLANS INCLUDING DIMENSIONS AND SPOT GRADING IS APPROXIMATE. ACTUAL DIMENSIONS AND GRADING OF CURB CUT TRANSITIONS SHALL BE DETERMINED BY THE CONTRACTOR IN THE FIELD ON A CASE BY CASE BASIS IN ORDER TO COMPLY WITH THIS DETAIL.
2. RAMP TO COMPLY WITH ADA REGULATIONS AND GUIDELINES.

HANDICAP CURB CUT TYPE I
N.T.S.

REGISTRY USE ONLY

APPROVED BY THE TOWN OF READING PLANNING BOARD — DATE

DRW:	DSC:	CHK:	DESCRIPTION	DATE	REV.

DETAIL SHEET

READING WOODS
in
READING, MA

Prepared For
PULTE HOMES OF NEW ENGLAND, L.L.C.
115 FLANDERS ROAD
WESTBORO, MA 01581

Marchionda & Associates, L.P.
Engineering and Planning Consultants
62 Montvale Avenue
Suite I
Stoneham, MA 02180
TEL: (781) 438-6121
FAX: (781) 438-9654
Email: engineering@marchionda.com
Website: www.marchionda.com

DATE: 1/4/11
H:\PROJECTS\487-187\PLAN SET 1-2011\DETAILS.DWG
M. & A. NO.: 487-187 | SCALE: NOT TO SCALE
SHEET 21 OF 33

© 2011 MARCHIONDA & ASSOCIATES, L.P.

GENERAL DRAINAGE NOTES
1. ALL DRAIN LINES SHALL BE CORRUGATED HIGH DENSITY POLYETHYLENE (HDPE) WITH SMOOTH INTERIOR – A.D.S. N-12 OR APPROVED EQUAL.
2. PIPE DIAMETER FOR THE STREET DRAINAGE SYSTEMS SHALL BE 12 INCHES UNLESS OTHERWISE SPECIFIED. PIPE DIAMETER FOR THE ROOF DRAIN COLLECTION SYSTEMS SHALL BE 6 INCHES UNLESS OTHERWISE SPECIFIED. PIPE DIAMETER FOR FOOTING DRAINS SHALL BE 4 INCHES UNLESS OTHERWISE SPECIFIED.
3. ALL FIELD CUTTING OF PIPE SHALL BE DONE IN ACCORDANCE TO MANUFACTURER'S SPECIFICATIONS.

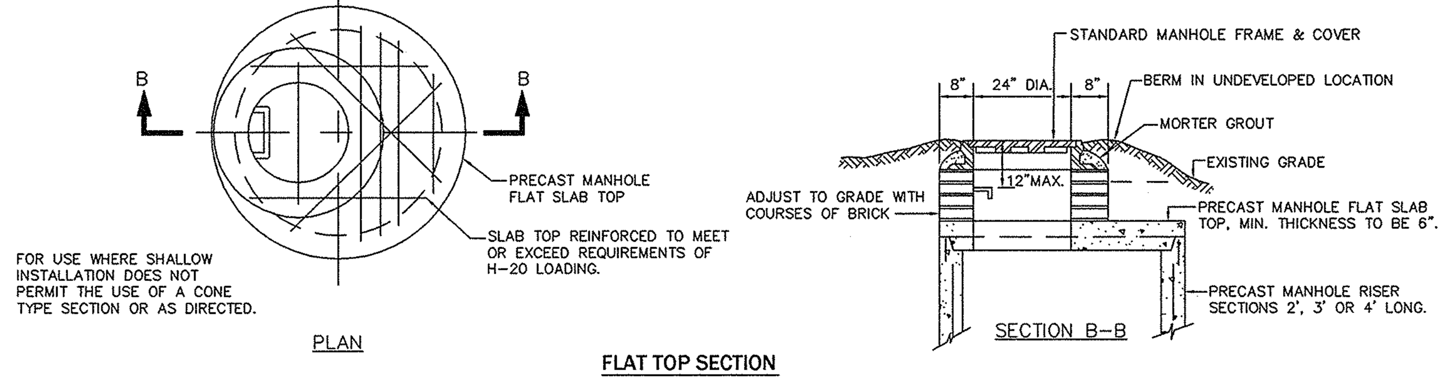

FLAT TOP SECTION
N.T.S.

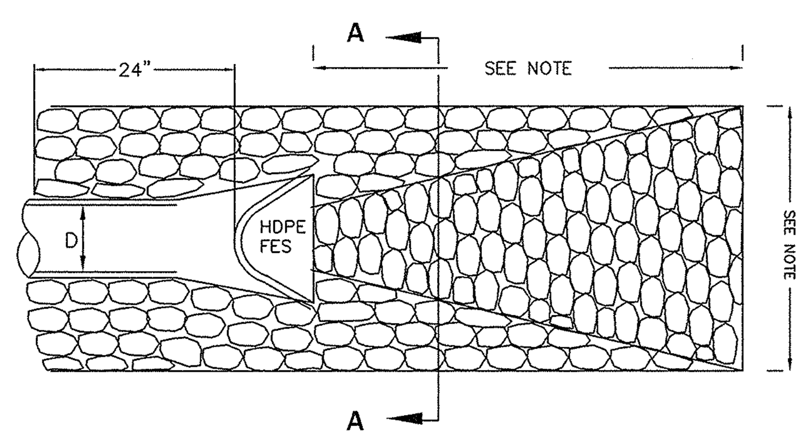

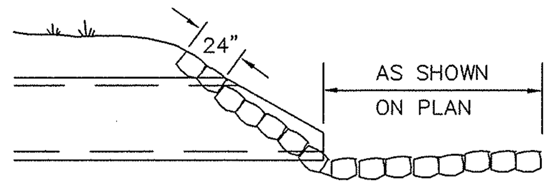

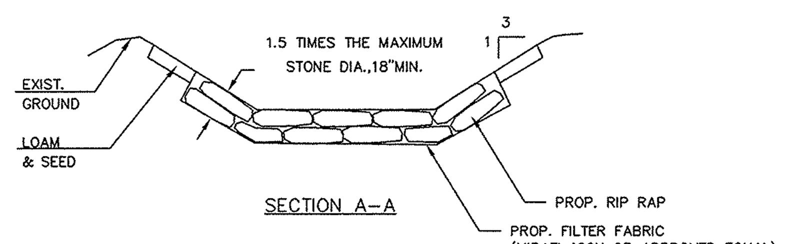

NOTES:
1. REFER TO SITE PLAN FOR ACTUAL APRON LENGTH AND WIDTH (VARIES BY LOCATION).
2. RIPRAP SHALL CONFORM TO MHD M2.02.3 "STONE FOR PIPE ENDS".

RIP - RAP APRON DETAIL
N.T.S.

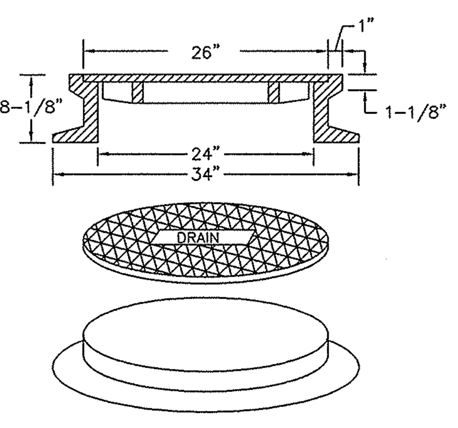

FRAME & COVER LE BARON FOUNDRY CAT. NO. LB268-3-000 OR APPROVED EQUAL

TOTAL WEIGHT: 475 LBS. (MIN.) COVER MUST HAVE A DIAMOND PATTERN WITH THE WORD "DRAIN"* CAST IN 3" HIGH LETTERS

DRAIN MANHOLE FRAME & COVER
N.T.S.

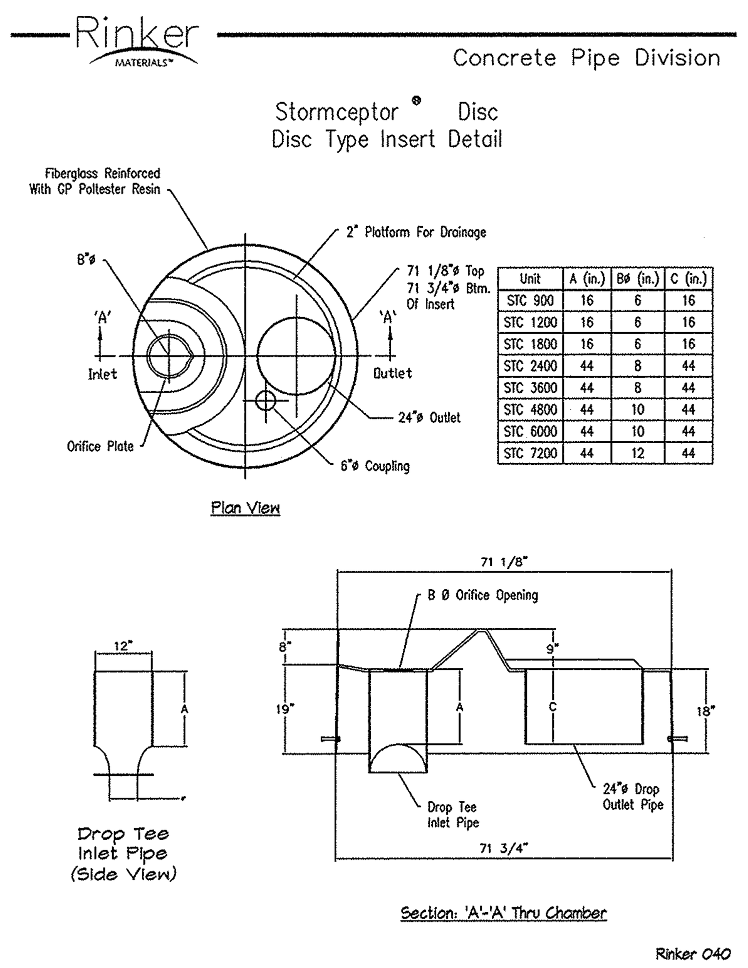

Unit	A (in.)	Bø (in.)	C (in.)
STC 900	16	6	16
STC 1200	16	6	16
STC 1800	16	6	16
STC 2400	44	8	44
STC 3600	44	8	44
STC 4800	44	10	44
STC 6000	44	10	44
STC 7200	44	12	44

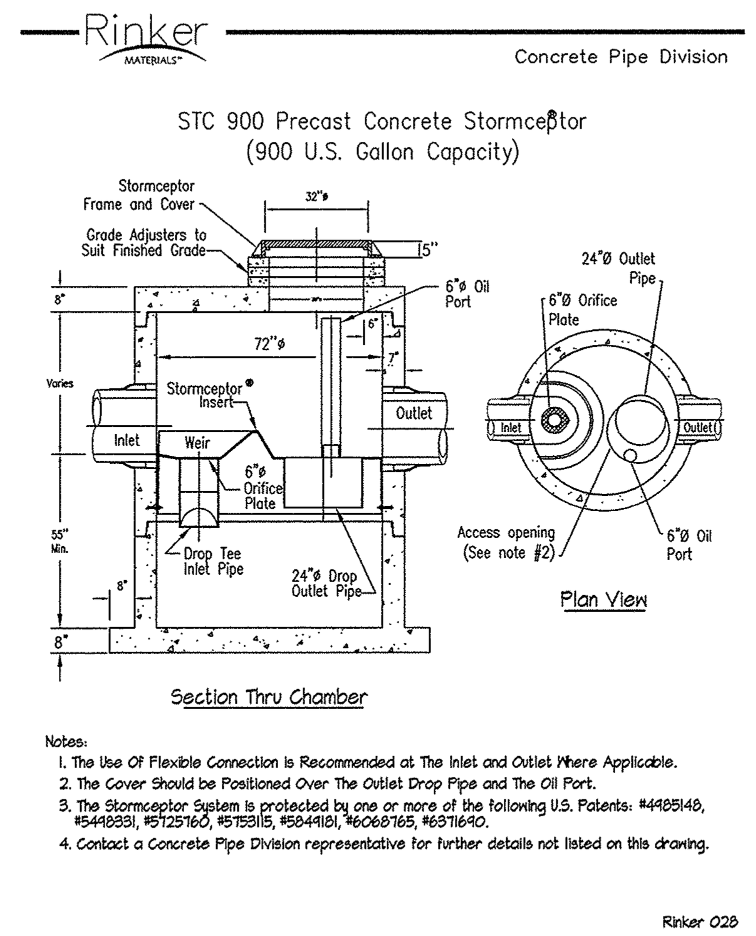

Notes:
1. The Use Of Flexible Connection Is Recommended at The Inlet and Outlet Where Applicable.
2. The Cover Should be Positioned Over The Outlet Drop Pipe and The Oil Port.
3. The Stormceptor System is protected by one or more of the following U.S. Patents: #4985148, #5498331, #5725760, #5753115, #5849181, #6068765, #6371690.
4. Contact a Concrete Pipe Division representative for further details not listed on this drawing.

Rinker 028

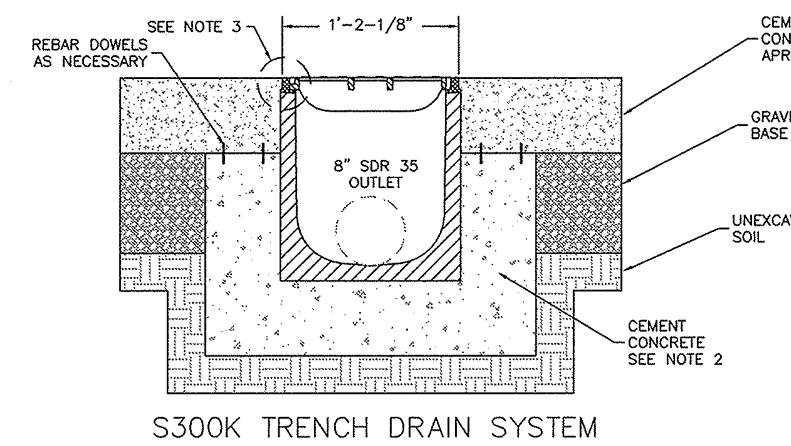

S300K TRENCH DRAIN SYSTEM

NOTES:
1. FRAME AND GRATE SHALL BE ITEM S300K BY ACO POLYMER PRODUCTS, INC. (WWW.ACOUSA.COM).
2. A MINIMUM CONCRETE STRENGTH OF 3000 PSI IS RECOMMENDED. THE CONCRETE SHOULD BE VIBRATED TO ELIMINATE AIR POCKETS.
3. THE FINISHED LEVEL OF THE CONCRETE SURROUND MUST BE APPROX. 1/8" ABOVE THE TOP OF THE CHANNEL EDGE.
4. REFER TO ACO'S LATEST INSTALLATION INSTRUCTIONS FOR COMPLETE DETAILS.
5. REFER TO ARCHITECTURAL PLANS FOR A DETAIL OF THE CONCRETE TRENCH.
6. FRAME SHALL BE TIED INTO CONCRETE AS RECOMMENDED BY THE MANUFACTURER. GRATE SHALL BE SECURED AS RECOMMENDED BY THE MANUFACTURER.
7. TRENCHES SHALL ACCOMMODATE AN 8" HDPE OUTLET PIPE. TRENCH DIMENSIONS SHOWN ARE CONSIDERED TO BE A MINIMUM.
5. TRENCH DRAINS SHALL BE 24 FEET IN LENGTH (REFER TO PLANS).
6. THE SYSTEM SHALL BE 12" NOMINAL INSIDE WIDTH AND 14" OVERALL WIDTH. THE SYSTEM SHALL BE BUILT WITH A SLOPE OF 0.6%.

TRENCH DRAIN DETAIL
N.T.S.

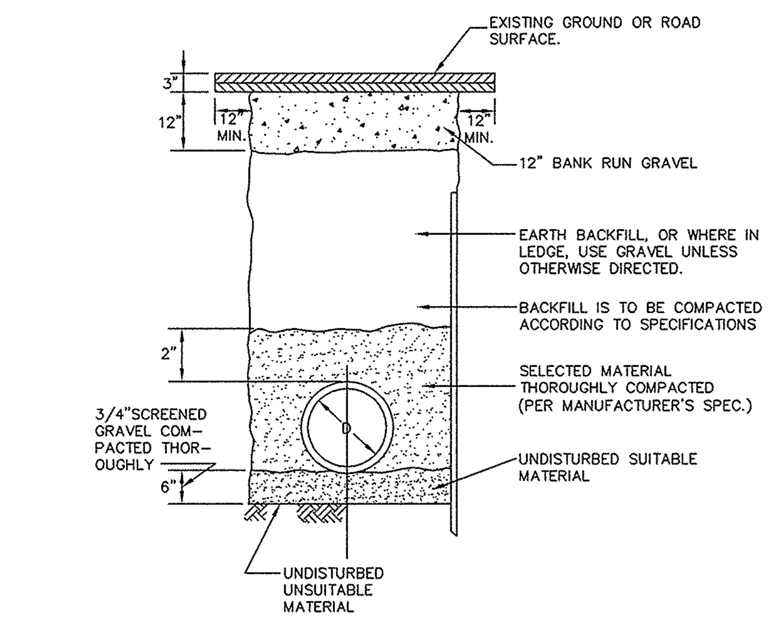

TYPICAL DRAIN TRENCH DETAIL
N.T.S.

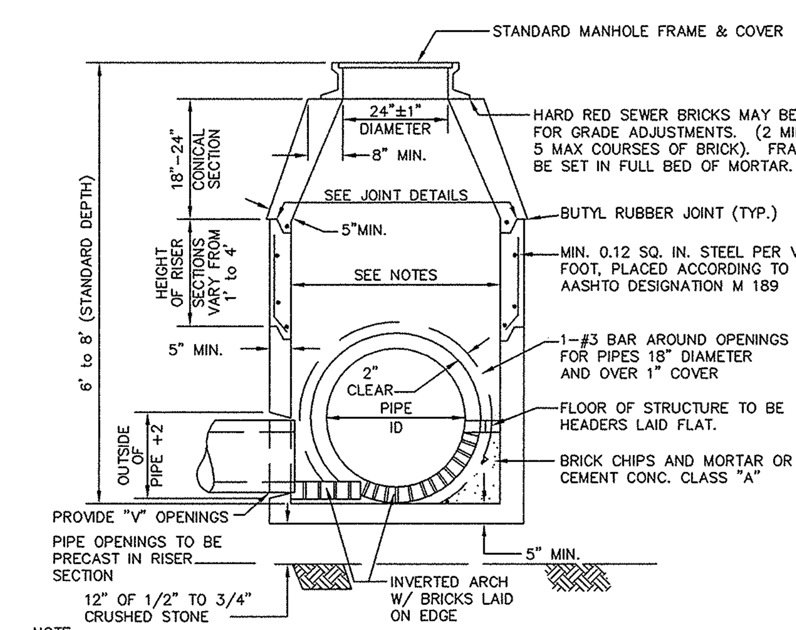

NOTE:
1. MANHOLE TO BE RATED FOR H-20 LOADING.
2. MANHOLES SHALL BE 4-FOOT DIAMETER UNLESS OTHERWISE REQUIRED TO ACCOMODATE THE CONFIGURATION OF OR THE NUMBER OF PIPES ENTERING AND DISCHARGING THE STRUCTURE. MANHOLES SHALL BE 6-FOOT DIAMETER WHERE THE PIPE DIAMETER IS 24" OR GREATER.

PRECAST CONCRETE MANHOLE DETAILS
N.T.S.

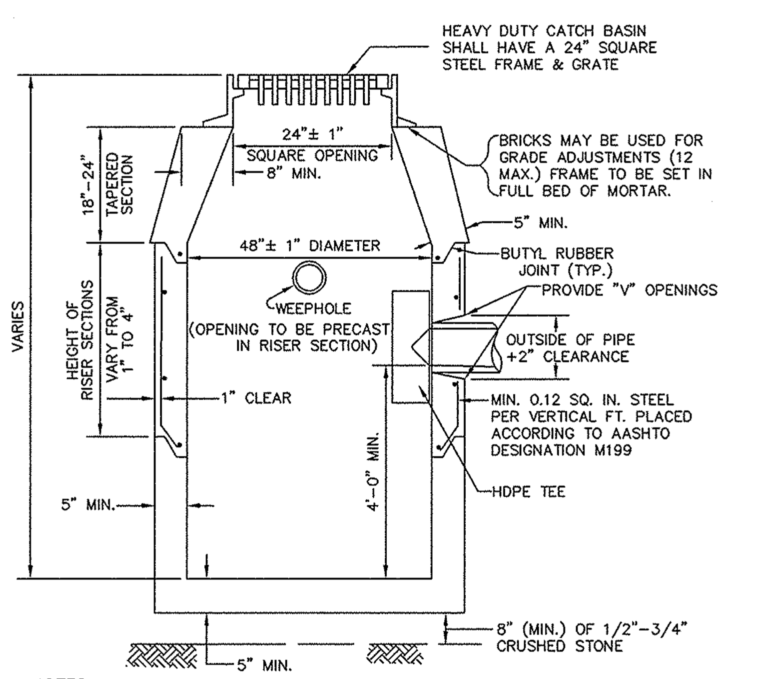

NOTES:
1. CATCH BASINS TO BE RATED FOR H-20 LOADING.
2. NO BELL ENDS IN CATCH BASIN. CONNECTIONS TO BE TIGHTLY SEALED.
3. STANDARD GRATE TO BE USED WHEN THE LONGITUDINAL SLOPE OF ROAD IS LESS THAN 6%. CASCADE TYPE GRATE TO BE USED WHEN THE LONGITUDINAL SLOPE OF ROAD EXCEEDS 6%.

PRECAST CONCRETE CATCH BASIN DETAILS
N.T.S.

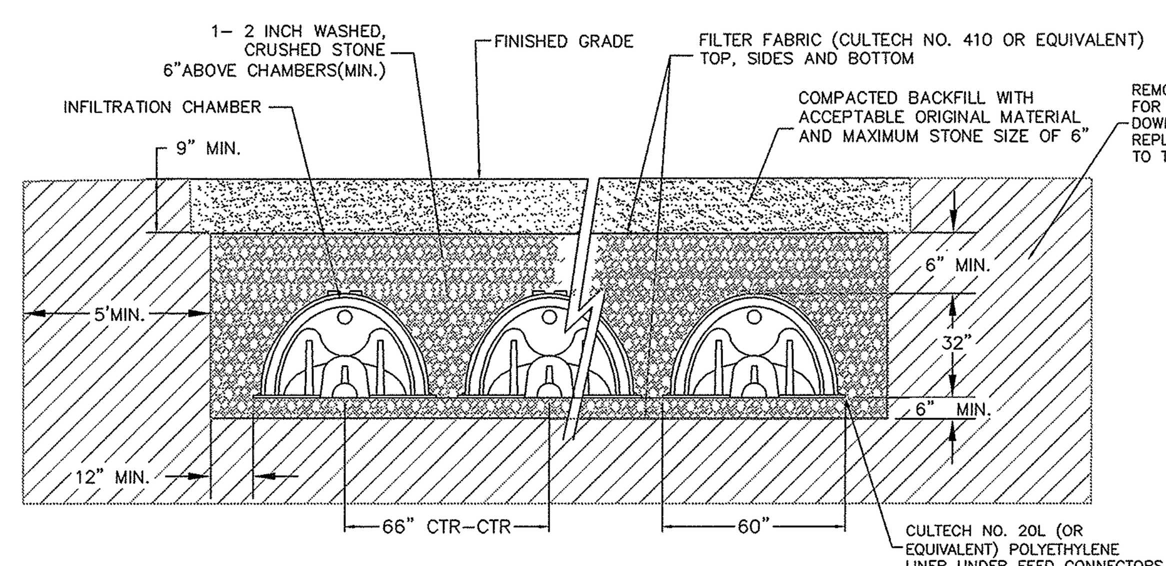

NOTES:
1. INFILTRATION SYSTEM SHALL BE CONSTRUCTED FROM CULTECH RECHARGER V8HD CHAMBERS.

GROUNDWATER RECHARGE SYSTEM CROSS SECTION
N.T.S.

RECHARGE SYSTEM SPECIFICATIONS

SYSTEM #	CONFIGURATION (# ROWS) X (# CHAMBERS/ROW)	TOTAL CHAMBERS	BOTTOM OF STONE	BOTTOM OF CHAMBERS	TOP OF STONE	OVERFLOW INVERT
1	3 X 4	12	159.50	160.00	164.20	163.20
2	6 X 8	48	139.50	140.50	145.70	144.20
3	2 X 7	14	141.50	142.50	147.20	146.20
4	3 X 6	18	134.50	135.50	140.20	139.20
5	6 X 9	54	135.00	136.00	140.70	139.70
6	3 X 12	36	132.00	133.00	138.30	137.00
7	3 X 7	21	132.50	133.50	138.20	137.20
8	2 X 5	10	129.00	129.50	133.70	132.70

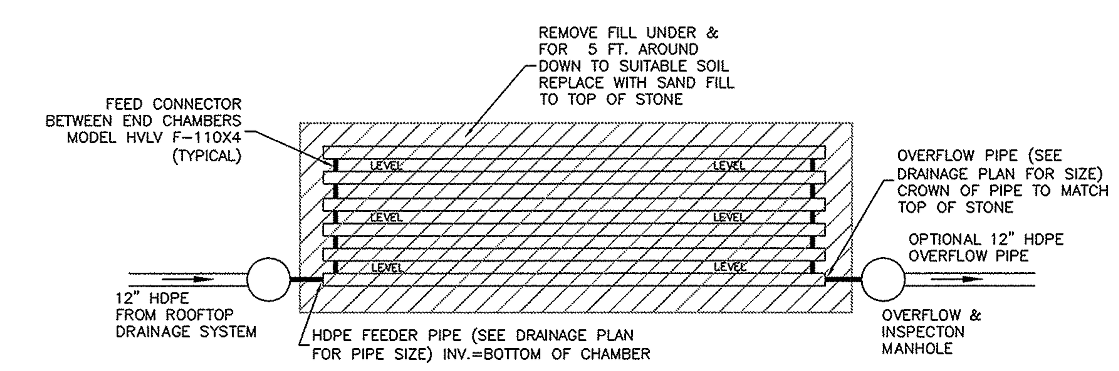

GROUNDWATER RECHARGE SYSTEM SYSTEM SCHEMATIC
N.T.S.

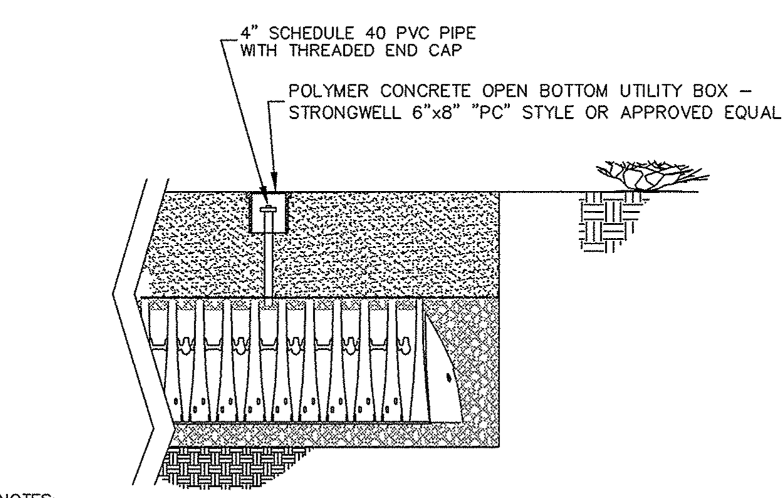

NOTES:
1. PROVIDE 6" (MIN.) BEDDING OF 3/4" CRUSHED STONE FOR UTILITY BOX.
2. PROVIDE ONE INSPECTION PORT IN THE CENTER OF EACH RECHARGE BASIN

GROUNDWATER RECHARGE SYSTEM INSPECTION PORT DETAIL
N.T.S.

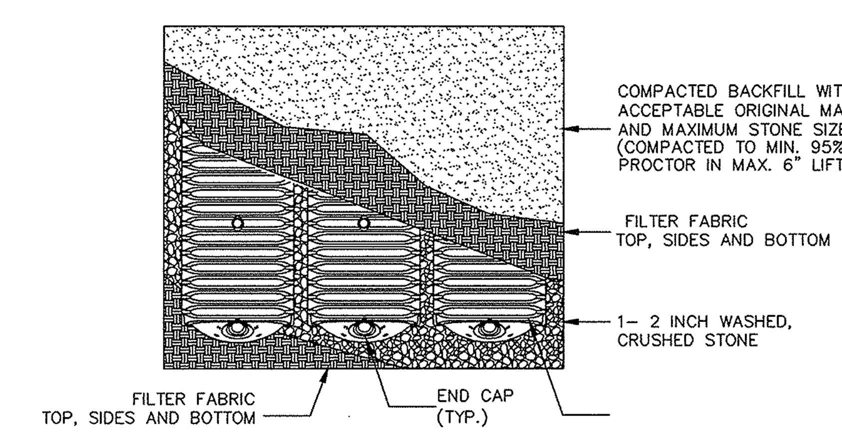

GROUNDWATER RECHARGE SYSTEM PLAN VIEW
N.T.S.

COMMONWEALTH OF MASSACHUSETTS PAUL A. MARCHIONDA CIVIL No. 30015 REGISTERED PROFESSIONAL ENGINEER

REGISTRY USE ONLY

APPROVED BY THE TOWN OF READING PLANNING BOARD

DATE

REV.	DESCRIPTION	DATE

DRW: DSG: CHK:

DETAIL SHEET

READING WOODS
in
READING, MA
Prepared For
PULTE HOMES OF NEW ENGLAND, L.L.C.
115 FLANDERS ROAD
WESTBORO, MA 01581

Marchionda & Associates, L.P.
Engineering and Planning Consultants
62 Montvale Avenue
Suite I
Stoneham, MA 02180
TEL: (781) 438-6121
FAX: (781) 438-9654
Email: engineering@marchionda.com
Website: www.marchionda.com

DATE: 1/4/11
H:\PROJECTS\487-187\PLAN SET 1-2011\DETAILS.DWG
M. & A. NO.: 487-187 SCALE: NOT TO SCALE
SHEET 22 OF 33

© 2011 MARCHIONDA & ASSOCIATES, L.P.

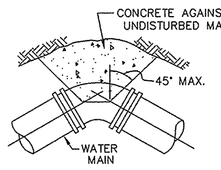

TYPICAL BEND

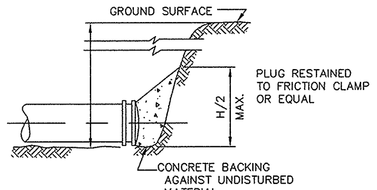

TYPICAL PLUG

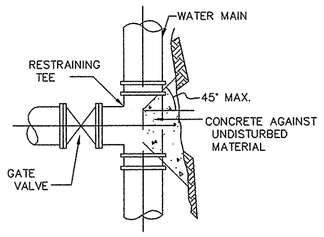

TYPICAL TEE

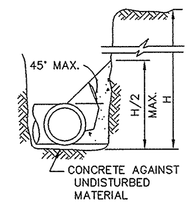

TYPICAL SECTION

NOTE: CONCRETE FOR THRUST BLOCKS SHALL BE NO LONGER THAN THE RATIO OF 2 1/2 : 5 1/2 AND SHALL HAVE A MINIMUM COMPRESSION STRENGTH OF 2000 PSI (SO THAT FLANGES AND BOLTS ARE ACCESSIBLE.)

BEARING AREAS OF THRUST BLOCKS (BEARING AREA IN SQUARE FT.)				
PIPE SIZE INCHES	1/4 BEND	1/8 BEND	1/16 BEND OR LESS	PLUG TEES
6 AND 8	8	8	8	8
10 AND 12	22	13	8	16

TYPICAL THRUST BLOCK DETAIL

NOT TO SCALE

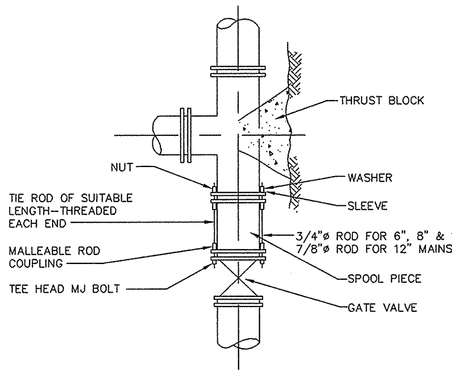

TYPICAL TIED MECHANICAL JOINT VALVE CONNECTION DETAILS

NOT TO SCALE

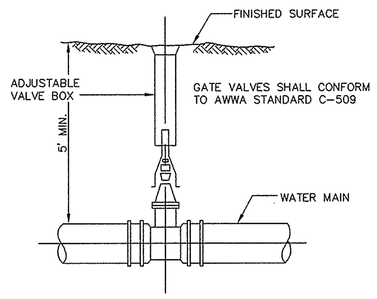

TYPICAL GATE VALVE

NOT TO SCALE

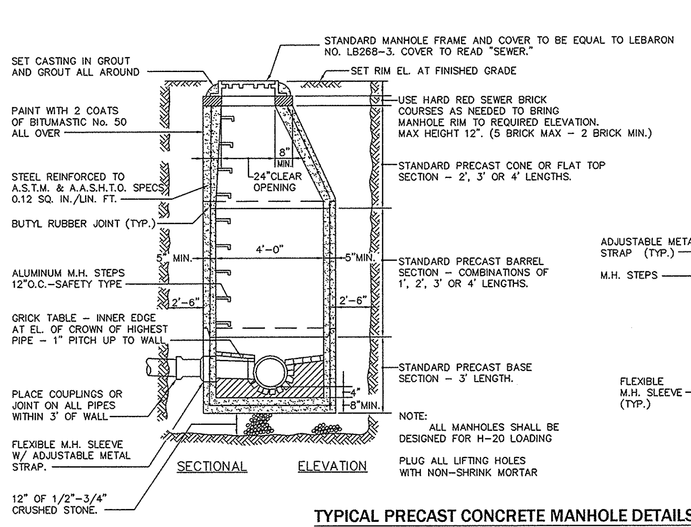

TYPICAL PRECAST CONCRETE MANHOLE DETAILS

N.T.S.

GENERAL SEWER NOTES:
1. GRAVITY SEWER MAIN SHALL BE 8-INCH SDR-35 PVC OR APPROVED EQUAL.
2. SEWERS SHOULD BE KEPT REMOTE FROM PUBLIC WATER SUPPLY WELLS OR OTHER POTABLE WATER SUPPLY SOURCES AND STRUCTURES. WHEREVER FEASIBLE, SEWERS SHOULD BE LAID AT A MINIMUM OF 10 FEET, HORIZONTALLY, FROM ANY EXISTING OR PROPOSED WATER MAIN. SHOULD LOCAL CONDITIONS PREVENT A LATERAL SEPARATION OF 10 FEET TO A WATER MAIN THE WATER MAIN SHOULD BE LAID IN A SEPARATE TRENCH AND THE ELEVATION OF THE CROWN OF THE SEWER PLACED AT LEAST 18" BELOW THE INVERT OF THE WATER MAIN.
3. WHEREVER SEWER MUST CROSS UNDER WATER MAINS, THE SEWER SHOULD BE LAID AT SUCH AN ELEVATION THAT THE CROWN OF THE SEWER IS AT LEAST 18 INCHES BELOW THE INVERT OF THE WATER MAIN. WHEN THE ELEVATION OF THE SEWER CANNOT BE VARIED TO MEET THIS REQUIREMENT, THE WATER MAIN SHOULD BE RELOCATED TO PROVIDE THIS SEPARATION OR CONSTRUCTED WITH MECHANICAL JOINT PIPE FOR A DISTANCE OF 10 FEET ON EACH SIDE OF THE SEWER. ONE FULL LENGTH OF WATER MAIN SHOULD BE CENTERED OVER THE SEWER SO THAT BOTH JOINTS WILL BE AS FAR FROM THE SEWER AS POSSIBLE.

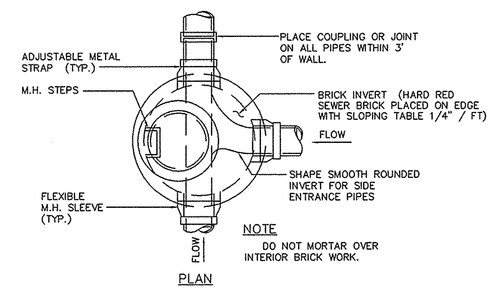

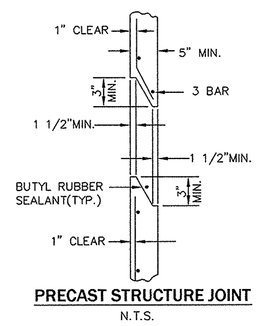

PRECAST STRUCTURE JOINT

N.T.S.

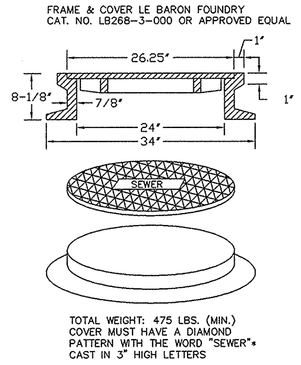

SEWER MANHOLE FRAME & COVER

N.T.S.

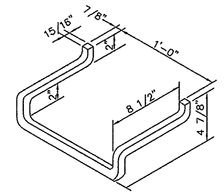

MANHOLE STEP DETAILS

N.T.S.

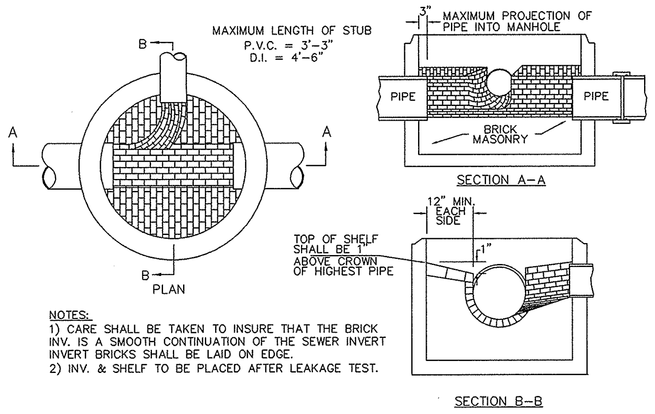

NOTES:
1) CARE SHALL BE TAKEN TO INSURE THAT THE BRICK INV. IS A SMOOTH CONTINUATION OF THE SEWER INVERT INVERT BRICKS SHALL BE LAID ON EDGE.
2) INV. & SHELF TO BE PLACED AFTER LEAKAGE TEST.

BRICK INVERT AT SEWER MANHOLE

N.T.S.

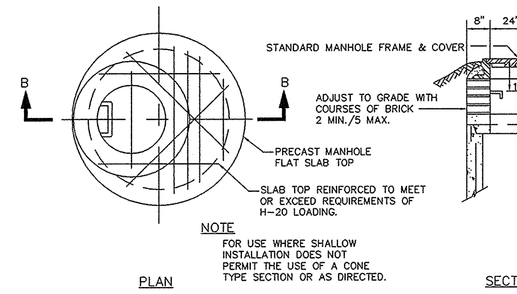

FLAT TOP SECTION

N.T.S.

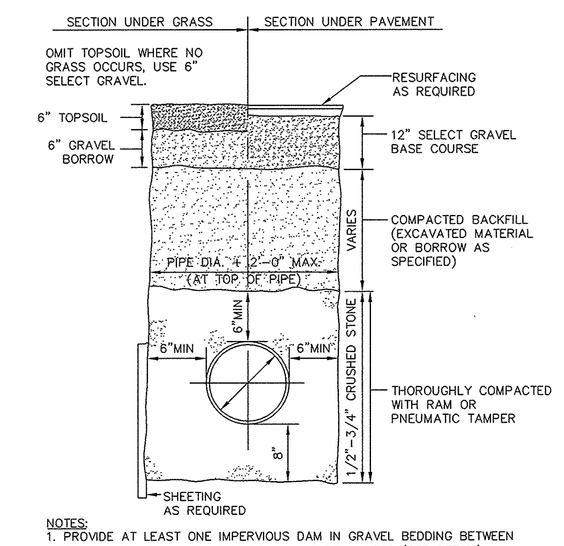

NOTES:
1. PROVIDE AT LEAST ONE IMPERVIOUS DAM IN GRAVEL BEDDING BETWEEN EACH MANHOLE OR EVERY 200 FT, WHICHEVER IS LESS (SEE DETAIL).
2. PROVIDE INSULATION AROUND PIPE WHERE COVER IS LESS THAN 3 FEET.

TYPICAL SEWER TRENCH DETAIL

N.T.S.

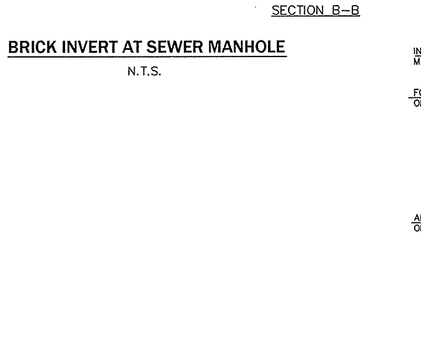

NOTE: THIS DETAIL APPLIES TO SEWER MANHOLES ONLY.

PIPE CONNECTION DETAIL

N.T.S.

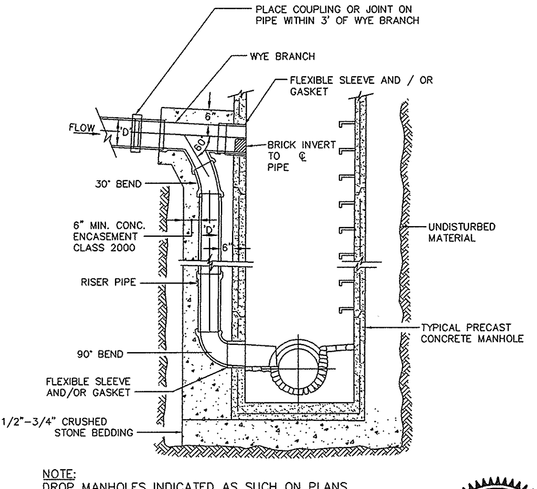

NOTE:
DROP MANHOLES INDICATED AS SUCH ON PLANS.

TYPICAL DROP INLET MANHOLE DETAILS

N.T.S.

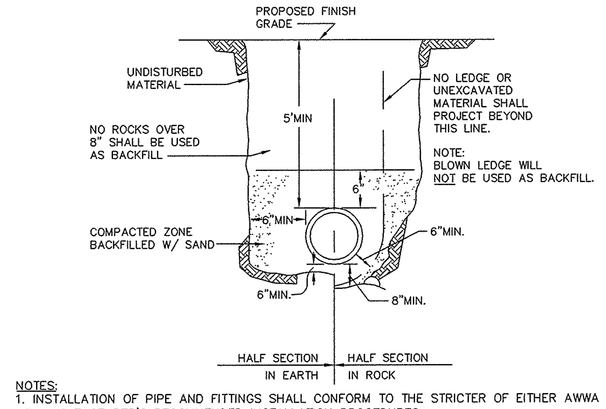

NOTES:
1. INSTALLATION OF PIPE AND FITTINGS SHALL CONFORM TO THE STRICTER OF EITHER AWWA STANDARDS OR MANUFACTURER'S RECOMMENDED INSTALLATION PROCEDURES.
2. PROVIDE AT LEAST ONE IMPERVIOUS DAM IN GRAVEL EVERY 200 FT AND AT ALL JUNCTIONS (ONE ON EACH LEG OF THE JUNCTION) - SEE DETAIL.
3. BEDDING AND BACKFILL SHOWN ON THIS DETAIL REPRESENT MINIMUM REQUIREMENTS AND SHALL BE ADJUSTED IF NECESSARY TO MEET PIPE MANUFACTURER'S REQUIREMENTS.

WATER MAIN TRENCH DETAIL

NOT TO SCALE

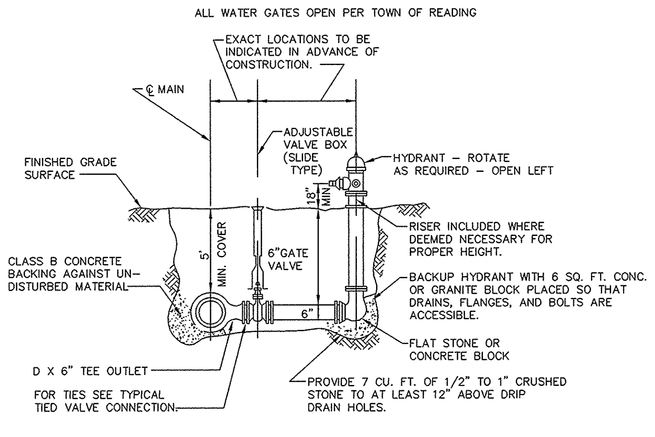

TYPICAL HYDRANT ASSEMBLY DETAIL

NOT TO SCALE

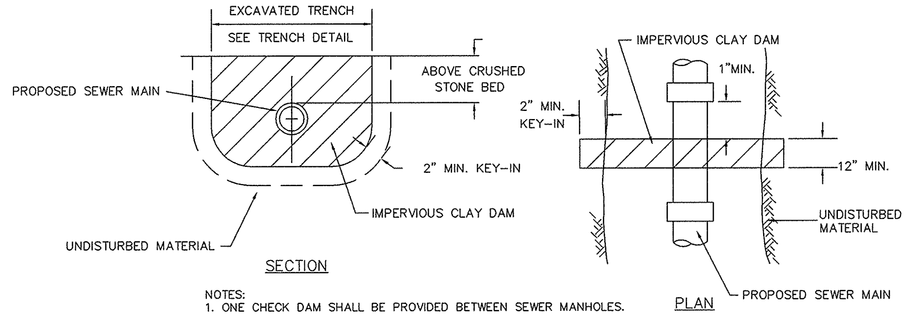

NOTES:
1. ONE CHECK DAM SHALL BE PROVIDED BETWEEN SEWER MANHOLES.

SEWER PIPE TRENCH (CHECK) DAM DETAIL

NOT TO SCALE

GENERAL WATER NOTES
1. PIPE, FITTINGS, VALVES, JOINTS/PACKING AND FIRE HYDRANTS SHALL CONFORM TO THE LATEST STANDARDS ISSUED BY THE AWWA, IF SUCH STANDARDS EXIST.
2. WATER MAINS SHALL BE CEMENT LINED DUCTILE IRON (CLDI), CLASS 52 OR APPROVED EQUAL, 8" DIAMETER UNLESS OTHERWISE NOTED (GASKETED PUSH-ON OR MECHANICAL JOINTS).
3. INSTALLATION OF PIPE AND FITTINGS SHALL CONFORM TO THE STRICTER OF TOWN OF READING STADARDS, AWWA STANDARDS OR MANUFACTURER'S RECOMMENDED INSTALLATION PROCEDURES.
4. A MINIMUM OF 5 FEET OF COVER SHALL BE MAINTAINED OVER WATER MAIN.
5. THE INSTALLED WATER MAINS SHALL BE PRESSURE TESTED AND LEAK TESTED IN ACCORDANCE WITH AWWA STANDARDS.
6. THE INSTALLED WATER MAINS SHALL BE DISINFECTED IN ACCORDANCE WITH AWWA STANDARDS.
7. THE PROJECT SHALL COMPLY WITH APPLICABLE CROSS-CONNECTION REQUIREMENTS OF THE TOWN OF READING AND THE MASSACHUSETTS DEPARTMENT OF ENVIRONMENTAL PROTECTION.

REGISTRY USE ONLY

APPROVED BY THE TOWN OF READING PLANNING BOARD

DATE

DRW.	DSG.	CHK.	DESCRIPTION	DATE	REV.

DETAIL SHEET

READING WOODS
in
READING, MA

Prepared For
PULTE HOMES OF NEW ENGLAND, L.L.C.
115 FLANDERS ROAD
WESTBORO, MA 01581

Marchionda & Associates, L.P.
Engineering and Planning Consultants
62 Montvale Avenue
Suite I
Stoneham, MA 02180
TEL: (781) 438-6121
FAX: (781) 438-9654
Email: engineering@marchionda.com
Website: www.marchionda.com

COMMONWEALTH OF MASSACHUSETTS
PAUL A. MARCHIONDA
CIVIL
No. 30015
REGISTERED PROFESSIONAL ENGINEER
CIVIL

DATE: 1/4/11

H:\PROJECTS\487-187\PLAN SET 1-2011\DETAILS.DWG

M. & A. NO.: 487-187 | SCALE: NOT TO SCALE

SHEET 23 OF 33

© 2011 MARCHIONDA & ASSOCIATES, L.P.

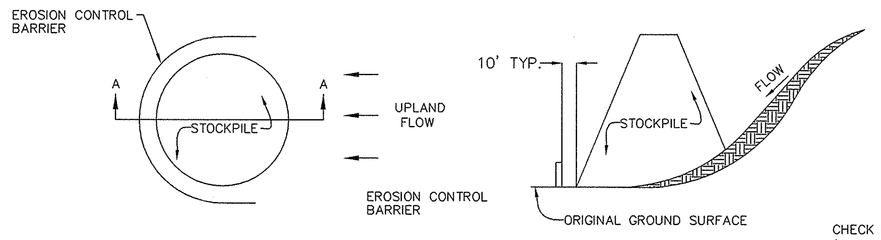

PLAN VIEW **SECTION A-A**

NOTES:
1. EROSION CONTROL BARRIER TO EXTEND AROUND DOWNSTREAM PORTION OF STOCKPILE.
2. SEDIMENT TRAPPED BY THE EROSION CONTROL BARRIER SHALL BE REMOVED AND PROPERLY DISPOSED OF AS NEEDED.
3. EROSION CONTROL BARRIER SHALL BE MAINTAINED IN PLACE UNTIL STOCKPILE HAS BEEN ELIMINATED.

TEMPORARY STOCKPILE DETAIL
N.T.S.

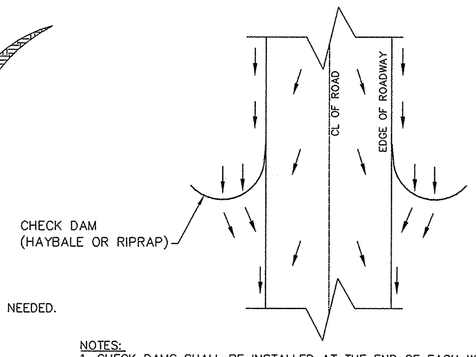

NOTES:
1. CHECK DAMS SHALL BE INSTALLED AT THE END OF EACH WORKING DAY AND PRIOR TO ANY EXPECTED RAINFALL EVENT.
2. CHECK DAMS SHALL BE PERIODICALLY CLEANED OUT OF ALL DEBRIS AND SILT.
3. CHECK DAMS SHALL BE PROVIDED IN ALL UNPAVED STREET AREAS AS NEEDED.

ROADSIDE CHECK DAM DETAIL
N.T.S.

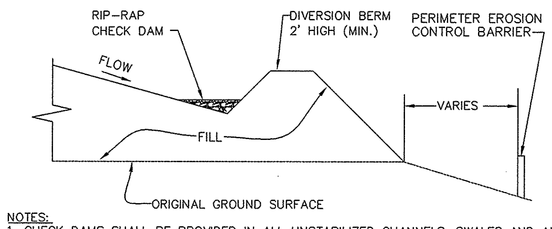

NOTES:
1. CHECK DAMS SHALL BE PROVIDED IN ALL UNSTABILIZED CHANNELS, SWALES AND ALONG DIVERSION BERMS AS NEEDED.
2. CHECK DAMS SHALL BE CLEANED OUT OF ALL DEBRIS AND SEDIMENT AS NEEDED.
3. ALL SEDIMENTATION BASIN BERMS SHALL BE 4' MIN. IN HEIGHT.

DIVERSION BERM DETAIL (TYP.)
N.T.S.

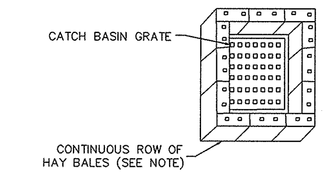

NOTE:
1. HAY BALES TO BE UTILIZED AROUND CATCH BASINS UNTIL SUCH TIME THAT THE BINDER IS PLACED. IN LIEU OF THIS METHOD, CATCH BASIN GRATES MAY BE BLOCKED TO PREVENT SEDIMENT FROM ENTERING THE CATCH BASIN UNTIL SUCH TIME THAT THE BINDER IS PLACED.

CATCH BASIN PROTECTION DETAIL
N.T.S.

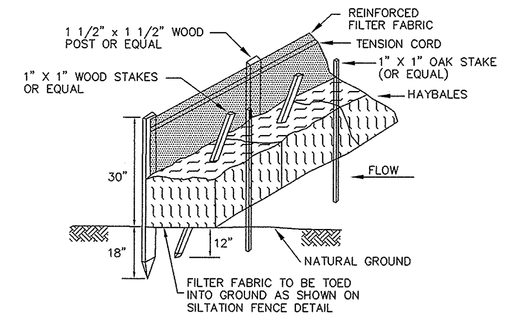

NOTES:
1. FIRST STAKE ANGLED TOWARDS PREVIOUSLY LAID BALE; SECOND STAKE PERPENDICULAR.
2. WIRE OR NYLON BOUND BALES USUALLY PLACED ON THE CONTOUR.
3. WHERE NECESSARY BALES AND GEOTEXTILE FABRIC WILL BE EMBEDDED 4 INCHES INTO THE GROUND.

EROSION CONTROL BARRIER DETAIL
N.T.S.

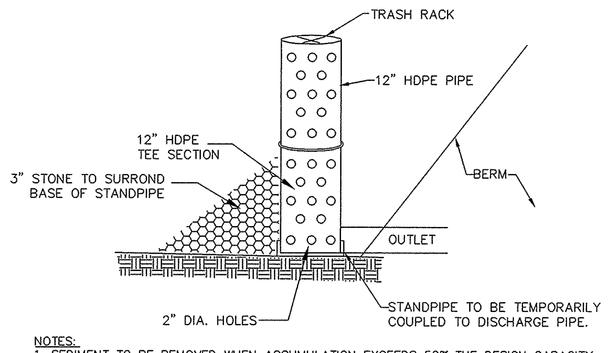

NOTES:
1. SEDIMENT TO BE REMOVED WHEN ACCUMULATION EXCEEDS 50% THE DESIGN CAPACITY.
2. STANDPIPE TO BE REMOVED AND REPLACED WITH PROPOSED PERMANENT OUTLET CONTROL STRUCTURE UPON STABILIZATION OF UPSTREAM AREAS.
3. CONTRACTOR SHALL REMOVE ALL SEDIMENT PRIOR TO ESTABLISHING FINAL POND GRADES.
4. STANDPIPE ELEVATION TO BE SET AT LEAST 12" BELOW TOP OF BERM.
5. PERFORATED PORTION OF STANDPIPE TO BE WRAPPED IN FILTER FABRIC.

TEMPORARY STANDPIPE DETAIL
N.T.S.

© 2011 MARCHIONDA & ASSOCIATES, L.P.

REGISTRY USE ONLY

APPROVED BY THE TOWN OF READING PLANNING BOARD

DATE

DRW:	DSG:	CHK:	BY	DESCRIPTION	DATE

DETAIL SHEET

READING WOODS
in
READING, MA

Prepared For
PULTE HOMES OF NEW ENGLAND, L.L.C.
115 FLANDERS ROAD
WESTBORO, MA 01581

Marchionda & Associates, L.P.
Engineering and Planning Consultants
62 Montvale Avenue
Suite I
Stoneham, MA 02180
TEL: (781) 438-6121
FAX: (781) 438-9654
Email: engineering@marchionda.com
Website: www.marchionda.com

COMMONWEALTH OF MASSACHUSETTS
PAUL A. MARCHIONDA
CIVIL
No. 30015
REGISTERED PROFESSIONAL ENGINEER

DATE: 1/4/11
H:\PROJECTS\487-187\PLAN SET 1-2011\DETAILS.DWG
M. & A. NO.: 487-187 SCALE: NOT TO SCALE
SHEET 24 OF 33