GENERAL DRAINAGE NOTES

1. ALL DRAIN LINES SHALL BE CORRUGATED HIGH DENSITY POLYETHYLENE (HDPE) WITH SMOOTH INTERIOR – A.D.S. N-12 OR APPROVED EQUAL.
2. PIPE DIAMETER FOR THE STREET DRAINAGE SYSTEMS SHALL BE 12 INCHES UNLESS OTHERWISE SPECIFIED. PIPE DIAMETER FOR THE ROOF DRAIN COLLECTION SYSTEMS SHALL BE 12 INCHES UNLESS OTHERWISE SPECIFIED. PIPE DIAMETER FOR THE ROOF DRAIN LEADERS SHALL BE 6 INCHES UNLESS OTHERWISE SPECIFIED. PIPE DIAMETER FOR FOOTING DRAINS SHALL BE 6 INCHES UNLESS OTHERWISE SPECIFIED.
3. ALL FIELD CUTTING OF PIPE SHALL BE DONE IN ACCORDANCE TO MANUFACTURER'S SPECIFICATIONS.
4. ALL CATCH BASINS TO HAVE DEBRIS TRAPS AS SHOWN IN DETAIL. ALL AREA DRAINS ARE TO BE PRECAST CONSRETE CATCH BASINS WITH OUT DEBRIS TRAPS.
5. ALL EXISTING DRAIN LINES TO BE UTILIZED SHALL BE TELEVISION INSPECTED FOR INTEGRITY BEFORE RE-USE. THE TOWN ENGINEERING DIVISION SHALL BE NOTIFIED OF ALL INSPECTIONS 36 HOURS IN ADVANCE. LINES DEEMED UNSUITABLE FOR RE-USE SHALL BE REPLACED IN THEIR ENTIRETY.
6. ALL MANHOLE COVERS SHALL BE TOWN STANDARD COVERS.

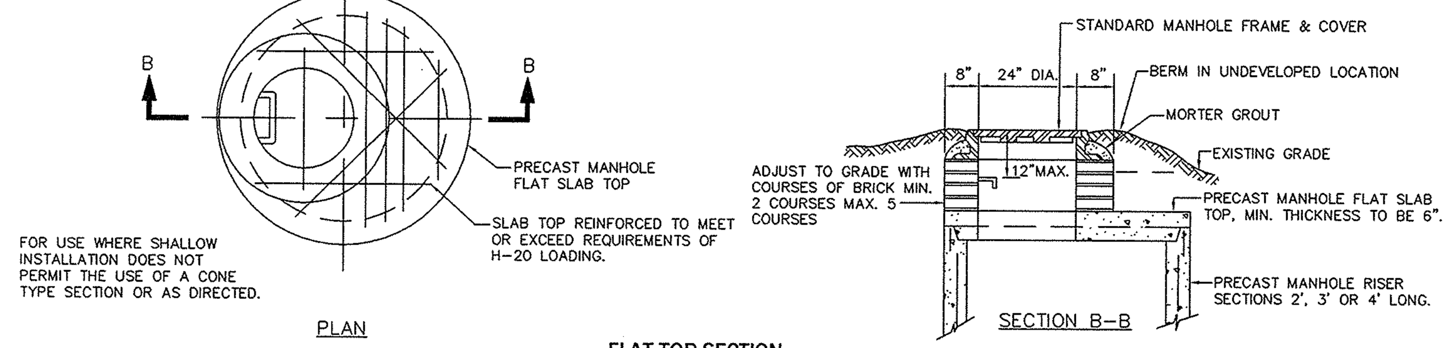

FLAT TOP SECTION
N.T.S.

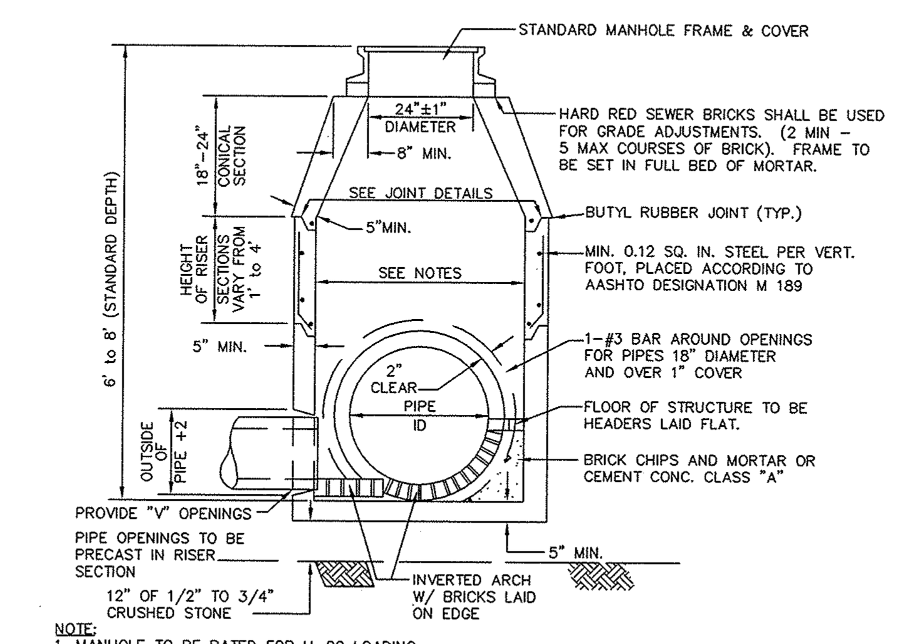

NOTE:
1. MANHOLE TO BE RATED FOR H-20 LOADING.
2. MANHOLES SHALL BE 4-FOOT DIAMETER UNLESS OTHERWISE REQUIRED TO ACCOMODATE THE CONFIGURATION OF OR THE NUMBER OF PIPES ENTERING AND DISCHARGING THE STRUCTURE. MANHOLES SHALL BE 6-FOOT DIAMETER WHERE THE PIPE DIAMETER IS 24" OR GREATER.

PRECAST CONCRETE MANHOLE DETAILS
N.T.S.

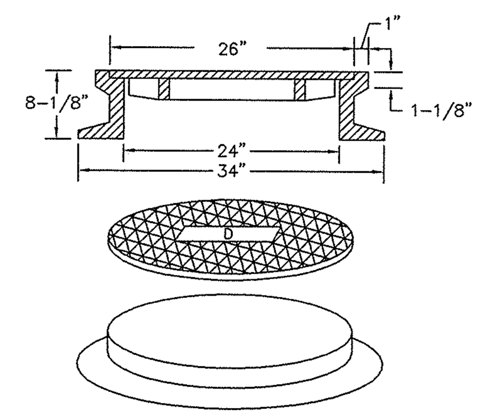

FRAME & COVER LE BARON FOUNDRY CAT. NO. LT101, NEENAH FOUNDRY NO. 1720–A OR APPROVED EQUAL
TOTAL WEIGHT: 475 LBS. (MIN.) COVER MUST HAVE A DIAMOND PATTERN WITH THE LETTER "D" CAST IN 3" HIGH LETTERS

DRAIN MANHOLE FRAME & COVER
N.T.S.

Rinker Materials — Concrete Pipe Division

Stormceptor® Disc
Disc Type Insert Detail

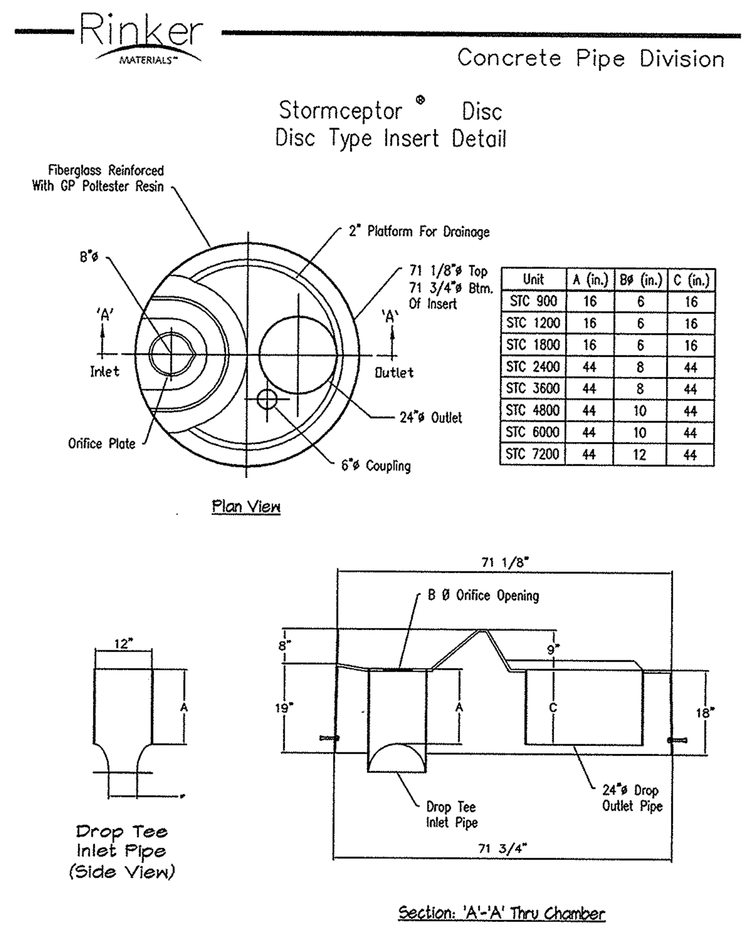

Unit	A (in.)	Bø (in.)	C (in.)
STC 900	16	6	16
STC 1200	16	6	16
STC 1800	16	6	16
STC 2400	44	8	44
STC 3600	44	8	44
STC 4800	44	10	44
STC 6000	44	10	44
STC 7200	44	12	44

Rinker Materials — Concrete Pipe Division

STC 900 Precast Concrete Stormceptor
(900 U.S. Gallon Capacity)

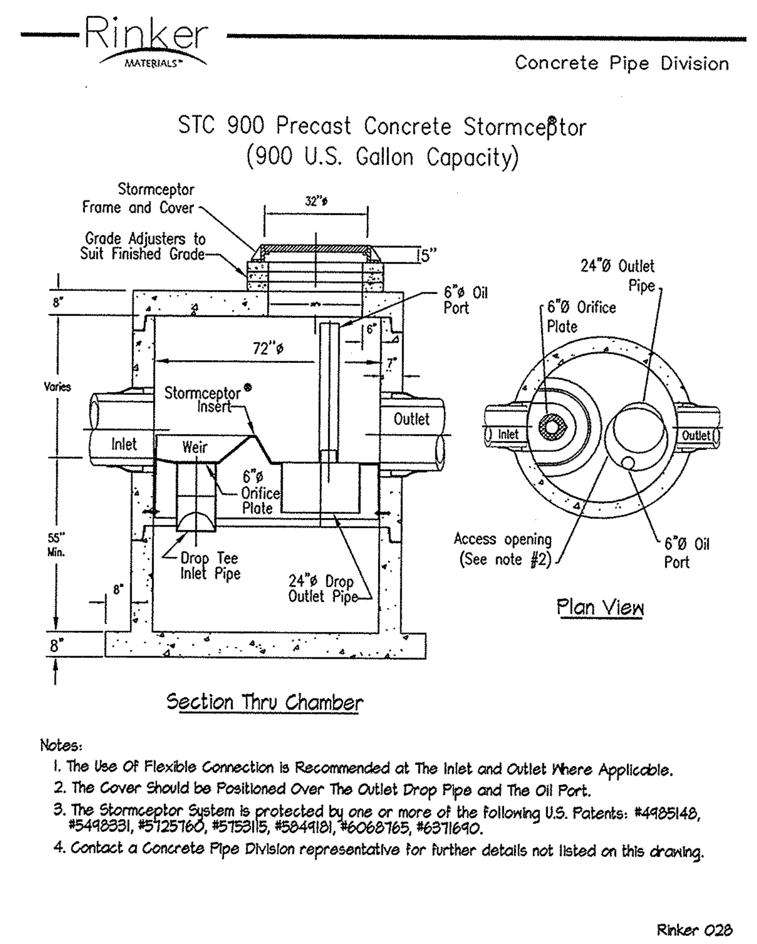

Notes:
1. The Use Of Flexible Connection is Recommended at The Inlet and Outlet Where Applicable.
2. The Cover Should be Positioned Over The Outlet Drop Pipe and The Oil Port.
3. The Stormceptor System is protected by one or more of the following U.S. Patents: #4985148, #5498331, #5725760, #5753115, #5849181, #6068765, #6371690.
4. Contact a Concrete Pipe Division representative for further details not listed on this drawing.

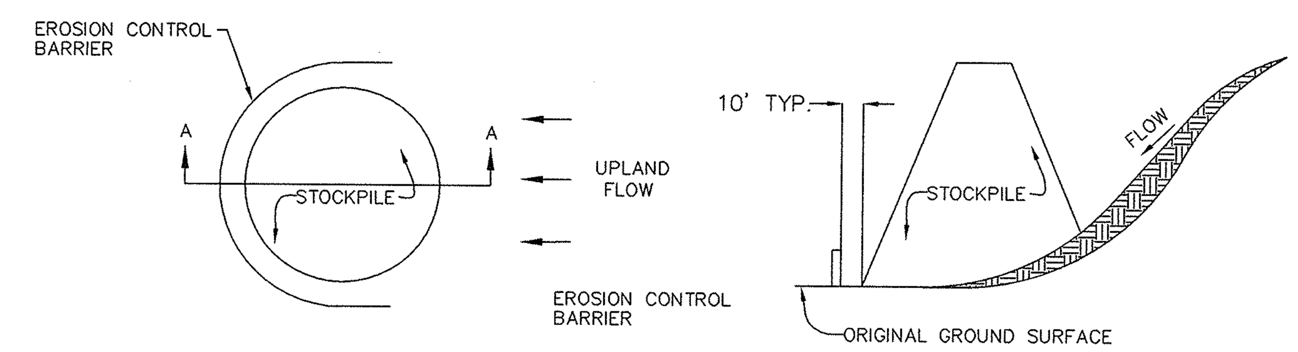

NOTES:
1. EROSION CONTROL BARRIER TO EXTEND AROUND DOWNSTREAM PORTION OF STOCKPILE.
2. SEDIMENT TRAPPED BY THE EROSION CONTROL BARRIER SHALL BE REMOVED AND PROPERLY DISPOSED OF AS NEEDED.
3. EROSION CONTROL BARRIER SHALL BE MAINTAINED IN PLACE UNTIL STOCKPILE HAS BEEN ELIMINATED.

TEMPORARY STOCKPILE DETAIL
N.T.S.

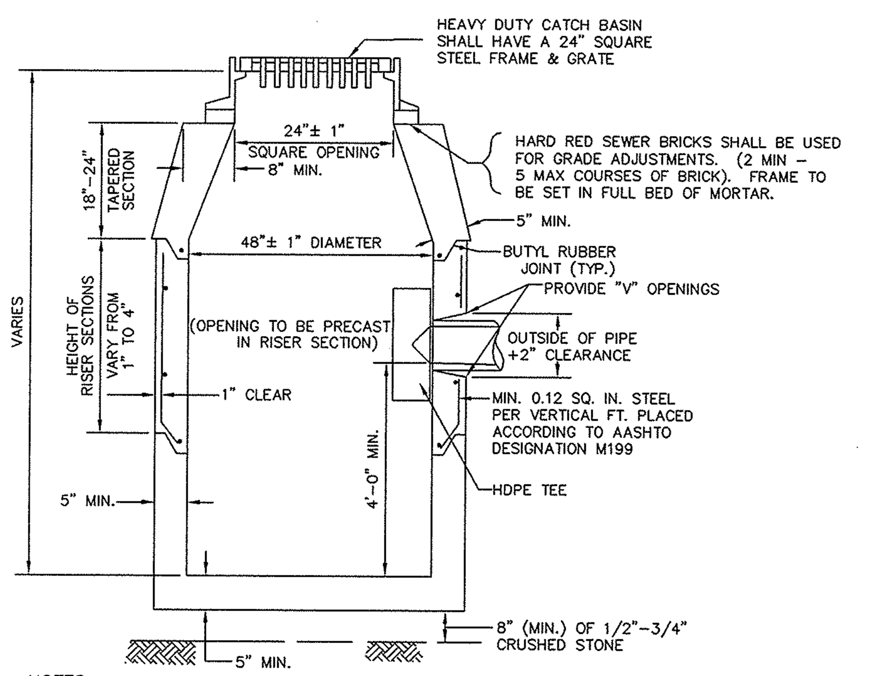

NOTES:
1. CATCH BASINS TO BE RATED FOR H-20 LOADING.
2. NO BELL ENDS IN CATCH BASIN. CONNECTIONS TO BE TIGHTLY SEALED.
3. STANDARD GRATE TO BE USED WHEN THE LONGITUDINAL SLOPE OF ROAD IS LESS THAN 6%. CASCADE TYPE GRATE TO BE USED WHEN THE LONGITUDINAL SLOPE OF ROAD EXCEEDS 6%.

PRECAST CONCRETE CATCH BASIN DETAILS
N.T.S.

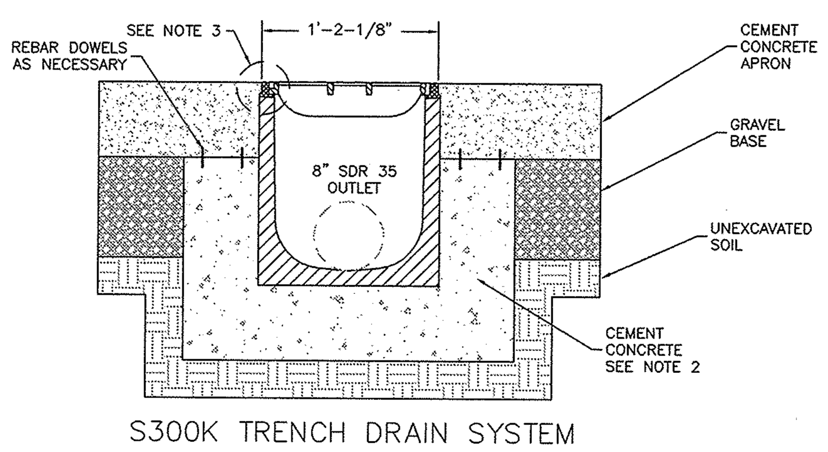

NOTES:
1. FRAME AND GRATE SHALL BE ITEM S300K BY ACO POLYMER PRODUCTS, INC. (WWW.ACOUSA.COM).
2. A MINIMUM CONCRETE STRENGTH OF 3000 PSI IS RECOMMENDED. THE CONCRETE SHOULD BE VIBRATED TO ELIMINATE AIR POCKETS.
3. THE FINISHED LEVEL OF THE CONCRETE SURROUND MUST BE APPROX. 1/8" ABOVE THE TOP OF THE CHANNEL EDGE.
4. REFER TO ACO'S LATEST INSTALLATION INSTRUCTIONS FOR COMPLETE DETAILS.
5. REFER TO ARCHITECTURAL PLANS FOR A DETAIL OF THE CONCRETE TRENCH.
6. FRAME SHALL BE TIED INTO CONCRETE AS RECOMMENDED BY THE MANUFACTURER. GRATE SHALL BE SECURED AS RECOMMENDED BY THE MANUFACTURER.
7. TRENCHES SHALL ACCOMMODATE AN 8" HDPE OUTLET PIPE. TRENCH DIMENSIONS SHOWN ARE CONSIDERED TO BE A MINIMUM.
5. TRENCH DRAINS SHALL BE 24 FEET IN LENGTH (REFER TO PLANS).
6. THE SYSTEM SHALL BE 12" NOMINAL INSIDE WIDTH AND 14" OVERALL WIDTH. THE SYSTEM SHALL BE BUILT WITH A SLOPE OF 0.6%.

TRENCH DRAIN DETAIL
N.T.S.

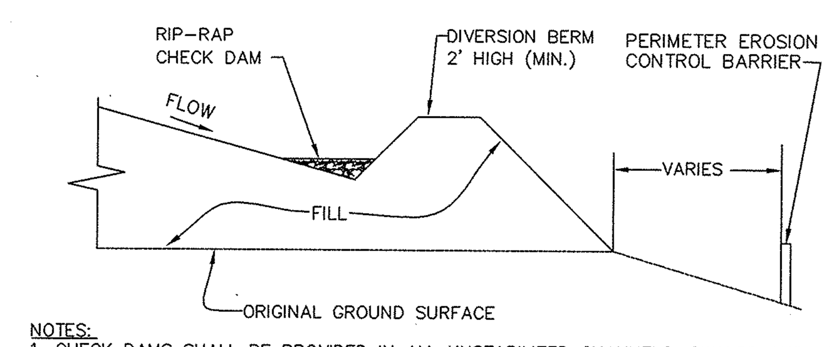

NOTES:
1. CHECK DAMS SHALL BE PROVIDED IN ALL UNSTABILIZED CHANNELS, SWALES AND ALONG DIVERSION BERMS AS NEEDED.
2. CHECK DAMS SHALL BE CLEANED OUT OF ALL DEBRIS AND SEDIMENT AS NEEDED.
3. ALL SEDIMENTATION BASIN BERMS SHALL BE 4' MIN. IN HEIGHT.

DIVERSION BERM DETAIL (TYP.)
N.T.S.

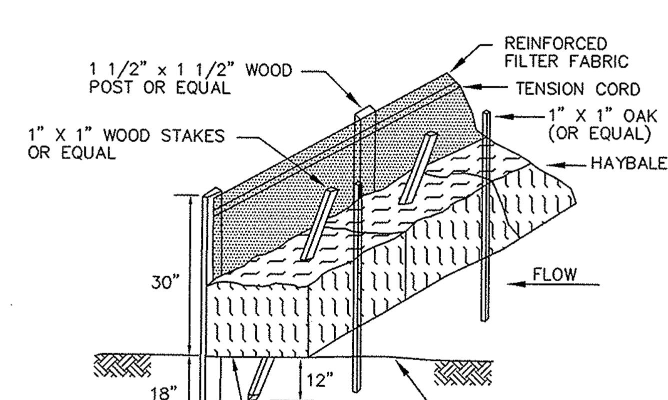

NOTES:
1. FIRST STAKE ANGLED TOWARDS PREVIOUSLY LAID BALE; SECOND STAKE PERPENDICULAR.
2. WIRE OR NYLON BOUND BALES USUALLY PLACED ON THE CONTOUR.
3. WHERE NECESSARY BALES AND GEOTEXTILE FABRIC WILL BE EMBEDDED 4 INCHES INTO THE GROUND.

EROSION CONTROL BARRIER DETAIL
N.T.S.

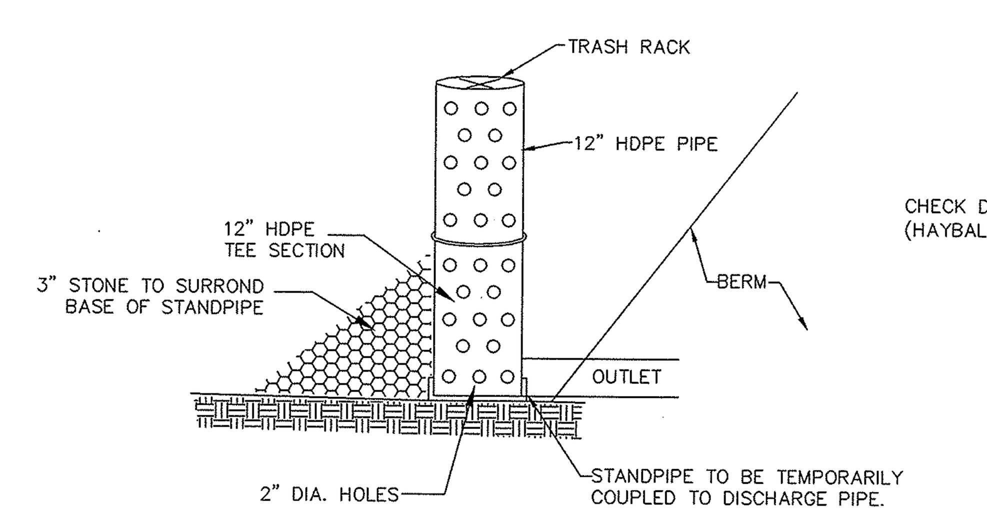

NOTES:
1. SEDIMENT TO BE REMOVED WHEN ACCUMULATION EXCEEDS 50% THE DESIGN CAPACITY.
2. STANDPIPE TO BE REMOVED AND REPLACED WITH PROPOSED PERMANENT OUTLET CONTROL STRUCTURE UPON STABILIZATION OF UPSTREAM AREAS.
3. CONTRACTOR SHALL REMOVE ALL SEDIMENT PRIOR TO ESTABLISHING FINAL POND GRADES.
4. STANDPIPE ELEVATION TO BE SET AT LEAST 12" BELOW TOP OF BERM.
5. PERFORATED PORTION OF STANDPIPE TO BE WRAPPED IN FILTER FABRIC.

TEMPORARY STANDPIPE DETAIL
N.T.S.

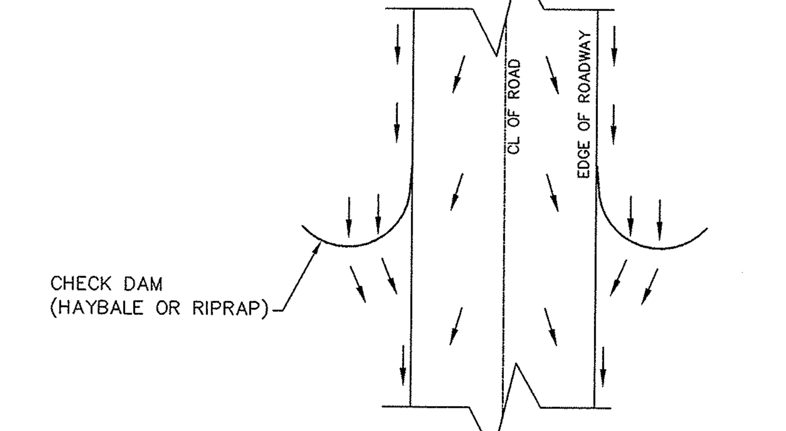

NOTES:
1. CHECK DAMS SHALL BE INSTALLED AT THE END OF EACH WORKING DAY AND PRIOR TO ANY EXPECTED RAINFALL EVENT.
2. CHECK DAMS SHALL BE PERIODICALLY CLEANED OUT OF ALL DEBRIS AND SILT.
3. CHECK DAMS SHALL BE PROVIDED IN ALL UNPAVED STREET AREAS AS NEEDED.

ROADSIDE CHECK DAM DETAIL
N.T.S.

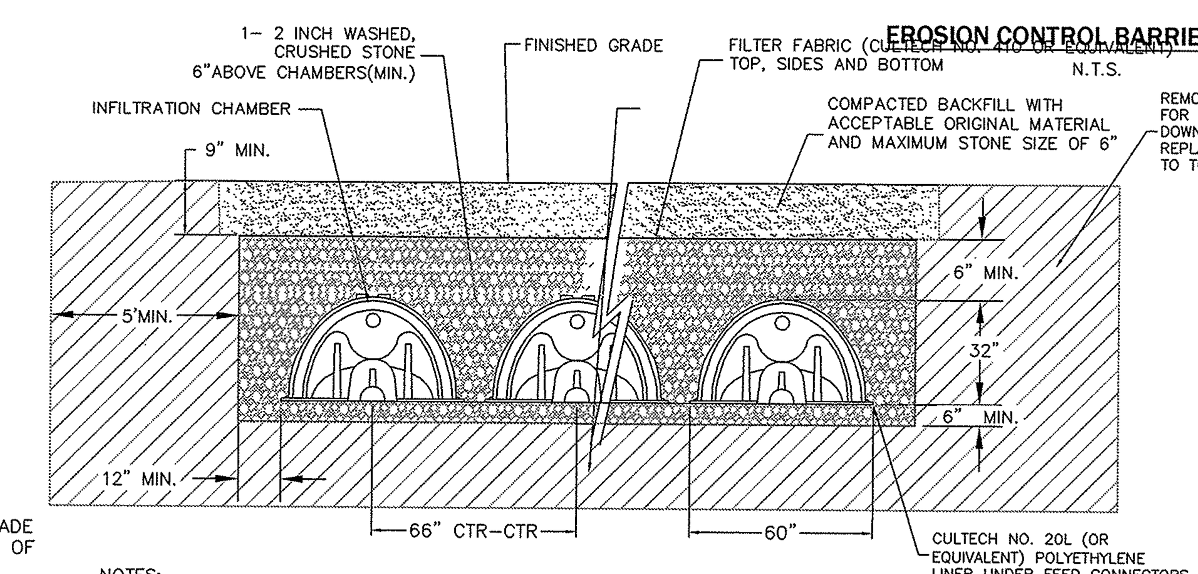

NOTES:
1. INFILTRATION SYSTEM SHALL BE CONSTRUCTED FROM CULTECH RECHARGER V8HD CHAMBERS OR APPROVED EQUAL.

GROUNDWATER RECHARGE SYSTEM
CROSS SECTION
N.T.S.

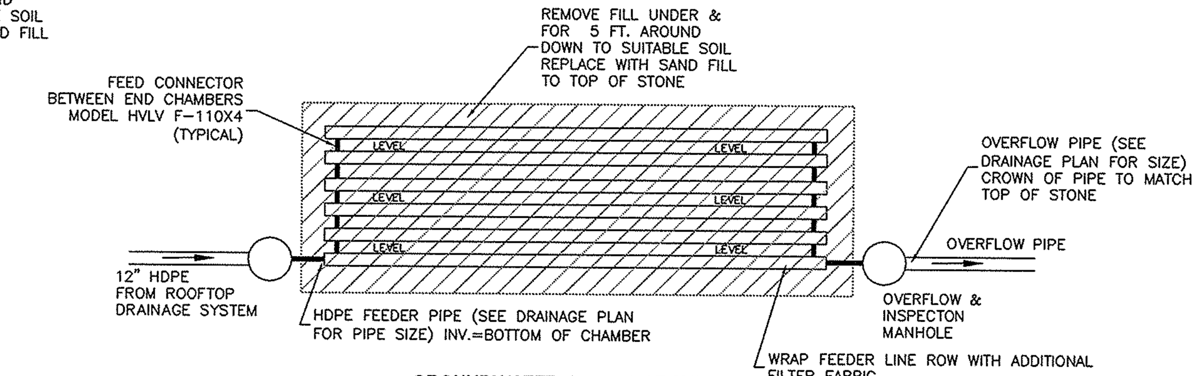

GROUNDWATER RECHARGE SYSTEM
SYSTEM SCHEMATIC
N.T.S.

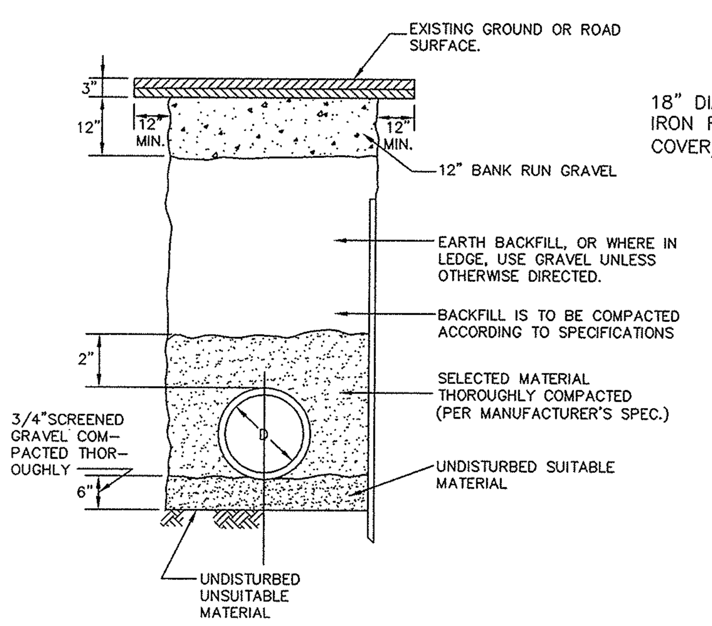

TYPICAL DRAIN TRENCH DETAIL
N.T.S.

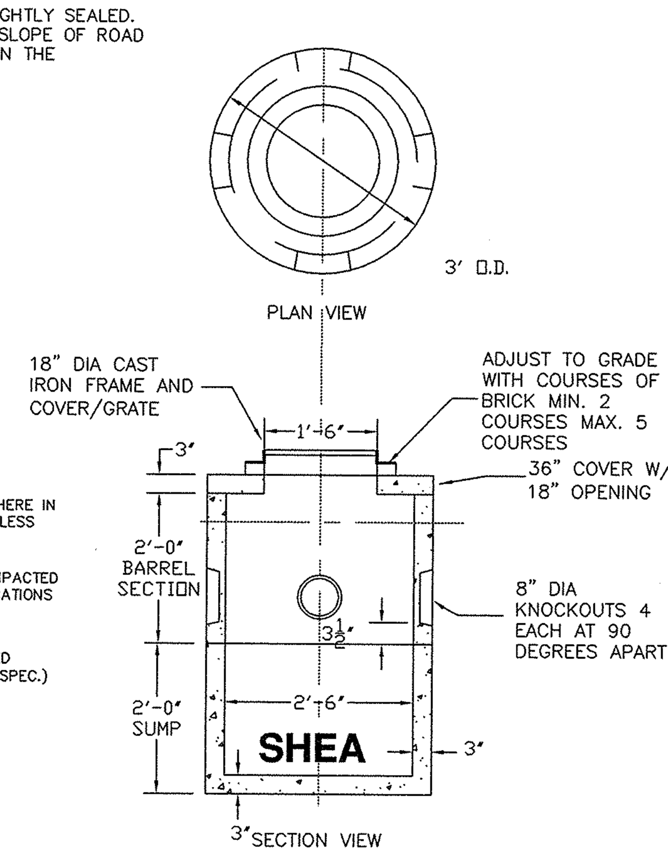

NOTES:
1. CONCRETE: 4,000 PSI MINIMUM AFTER 28 DAYS.
2. OPTIONAL 1', 2' OR 3' RISERS MAY BE USED AS NECESSARY TO BRING TOP OF STRUCTURE TO GRADE.

30" DIA. MANHOLE
NOT TO SCALE

RECHARGE SYSTEM SPECIFICATIONS

SYSTEM #	CONFIGURATION (# ROWS) X (# CHAMBERS/ROW)	TOTAL CHAMBERS	BOTTOM OF STONE	BOTTOM OF CHAMBERS	TOP OF STONE	OVERFLOW INVERT
1	3 X 4	12	159.50	160.00	164.20	163.20
2	6 X 9	54	137.30	138.30	143.0	142.0
3	2 X 7	14	140.50	141.50	146.20	145.20
4	3 X 6	18	134.50	135.50	140.20	139.20
5	6 X 9	54	135.00	136.00	140.70	139.70
6	3 X 12	36	130.30	131.30	136.00	135.00
7	3 X 7	21	132.50	133.50	138.20	137.20
8	2 X 5	10	129.00	129.50	133.70	132.70

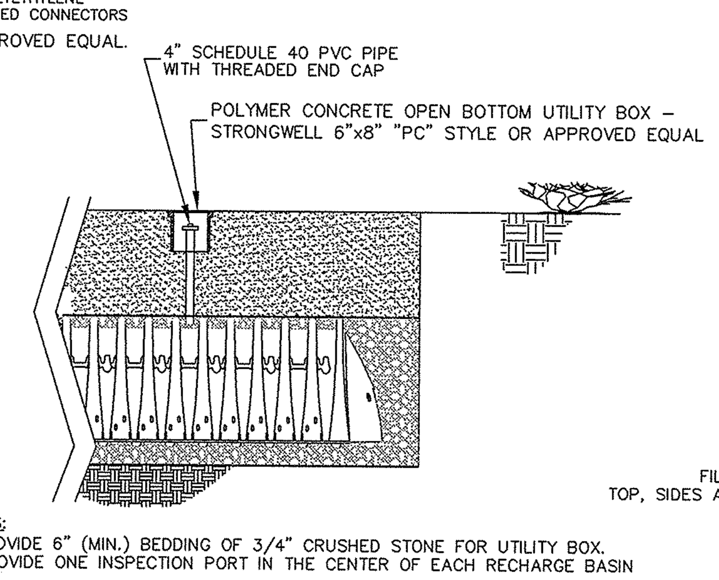

NOTES:
1. PROVIDE 6" (MIN.) BEDDING OF 3/4" CRUSHED STONE FOR UTILITY BOX.
2. PROVIDE ONE INSPECTION PORT IN THE CENTER OF EACH RECHARGE BASIN

GROUNDWATER RECHARGE SYSTEM
INSPECTION PORT DETAIL
N.T.S.

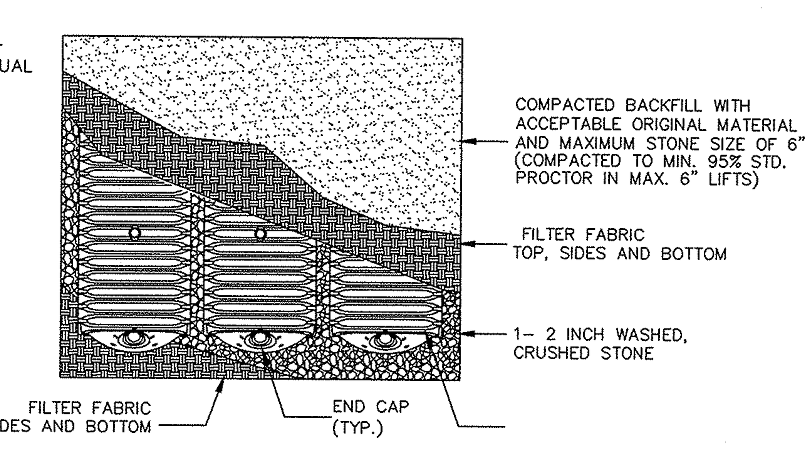

GROUNDWATER RECHARGE SYSTEM
PLAN VIEW
N.T.S.

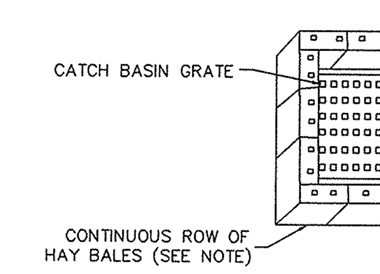

NOTE:
1. HAY BALES TO BE UTILIZED AROUND CATCH BASINS UNTIL SUCH TIME THAT THE BINDER IS PLACED. IN LIEU OF THIS METHOD, CATCH BASIN GRATES MAY BE BLOCKED TO PREVENT SEDIMENT FROM ENTERING THE CATCH BASIN UNTIL SUCH TIME THAT THE BINDER IS PLACED.

CATCH BASIN PROTECTION DETAIL
N.T.S.

COMMONWEALTH OF MASSACHUSETTS — PAUL A. MARCHIONDA — CIVIL — No. 30015 — REGISTERED PROFESSIONAL ENGINEER — 3-14-11

REGISTRY USE ONLY

APPROVED BY THE TOWN OF READING PLANNING BOARD

DATE

DRW:	DSG:	CHK:

REV.	DESCRIPTION	DATE
4.	ENGINEERING COMMENTS	3/14/11
3.	CON. COM. REVISIONS	3/9/11
2.	CPDC COMMENTS	2/15/11
1.	CON. COM. REVISIONS	2/8/11

DETAIL SHEET

READING WOODS
in
READING, MA

Prepared For

PULTE HOMES OF NEW ENGLAND, L.L.C.
115 FLANDERS ROAD
WESTBORO, MA 01581

Marchionda & Associates, L.P.
Engineering and Planning Consultants
62 Montvale Avenue
Suite I
Stoneham, MA 02180
TEL: (781) 438-6121
FAX: (781) 438-9654
Email: engineering@marchionda.com
Website: www.marchionda.com

DATE: 1/4/11
H:\PROJECTS\487-187\PB PLAN SET 3-14-2011\DETAILS.DWG
M. & A. NO.: 487-187 | SCALE: NOT TO SCALE
SHEET 22 OF 34

© 2011 MARCHIONDA & ASSOCIATES, L.P.

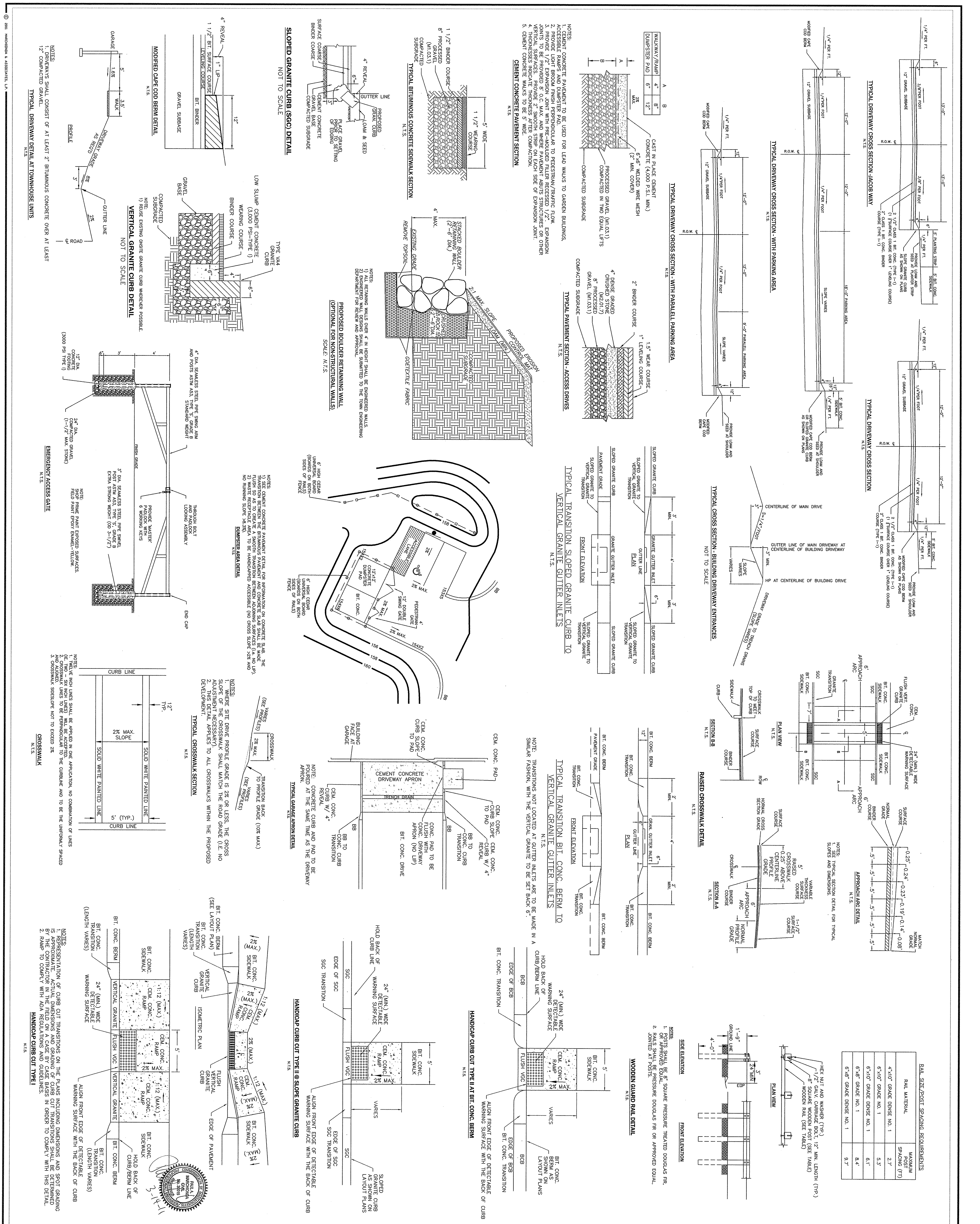

DETAIL SHEET

READING WOODS
in
READING, MA

Prepared For

PULTE HOMES OF NEW ENGLAND, L.L.C.
115 FLANDERS ROAD
WESTBORO, MA 01581

REV.	DESCRIPTION	DATE
4.	ENGINEERING COMMENTS	3/14/11
3.	CON. COM. REVISIONS	3/9/11
2.	CPDC COMMENTS	2/15/11
1.	CON. COM. REVISIONS	2/8/11

DRW: DSG: CHK:

Marchionda & Associates, L.P.
Engineering and Planning Consultants
62 Montvale Avenue
Suite I
Stoneham, MA 02180
TEL: (781) 438-6121
FAX: (781) 438-9654
Email: engineering@marchionda.com
Website: www.marchionda.com

DATE: 1/4/11
H:\PROJECTS\487-187\PB PLAN SET 3-14-2011\DETAILS.DWG
M. & A. NO.: 487-187 SCALE: NOT TO SCALE
SHEET 21 OF 34

APPROVED BY THE
TOWN OF READING
PLANNING BOARD

DATE

REGISTRY USE ONLY

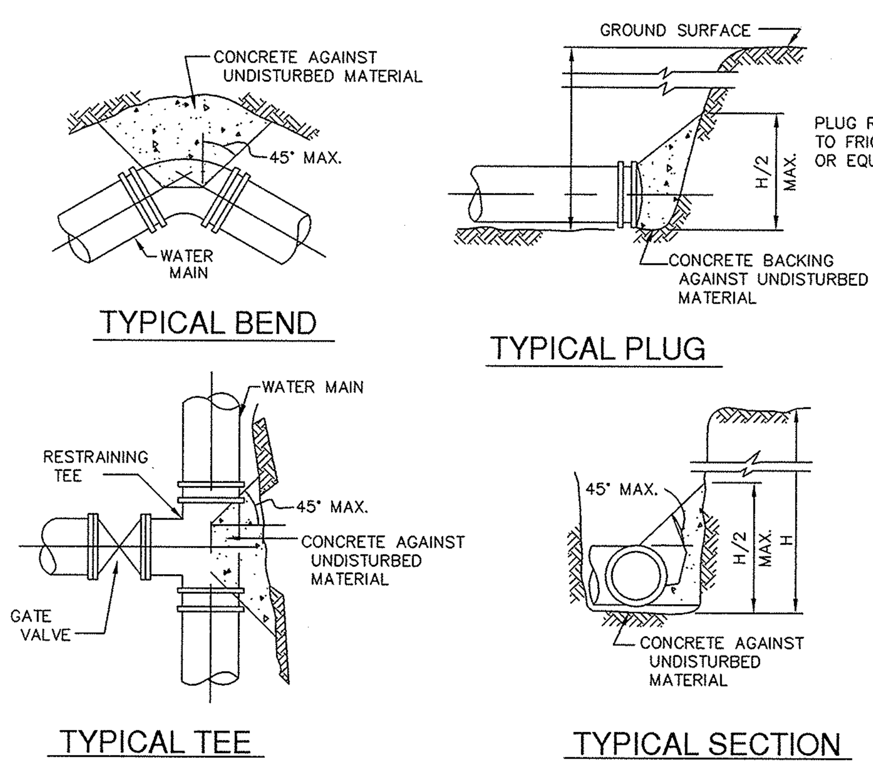

NOTE: CONCRETE FOR THRUST BLOCKS SHALL BE NO LONGER THAN THE RATIO OF 2 1/2 : 5 1/2 AND SHALL HAVE A MINIMUM COMPRESSION STRENGTH OF 2000 PSI (SO THAT FLANGES AND BOLTS ARE ACCESSIBLE.)

BEARING AREAS OF THRUST BLOCKS (BEARING AREA IN SQUARE FT.)				
PIPE SIZE INCHES	1/4 BEND	1/8 BEND	1/16 BEND OR LESS	PLUG TEES
6 AND 8	8	8	8	8
10 AND 12	22	13	8	16

TYPICAL THRUST BLOCK DETAIL

NOT TO SCALE

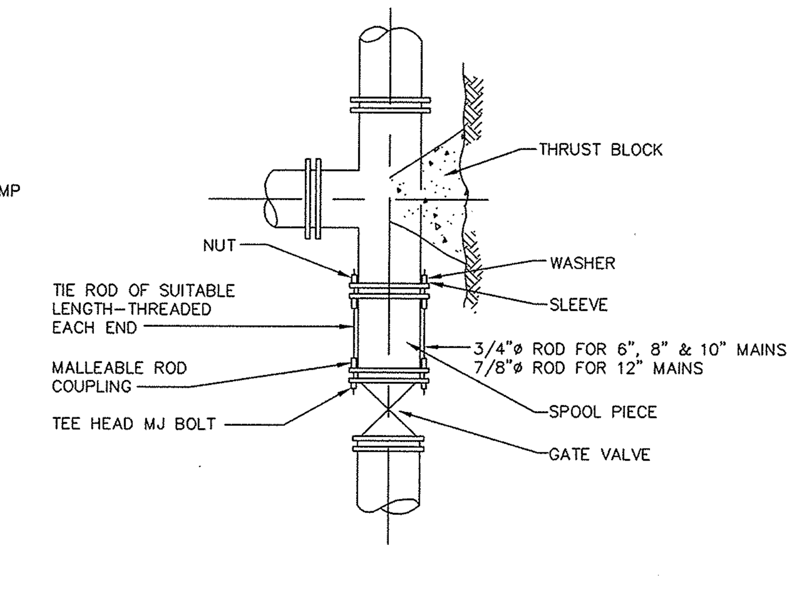

TYPICAL TIED MECHANICAL JOINT VALVE CONNECTION DETAILS

NOT TO SCALE

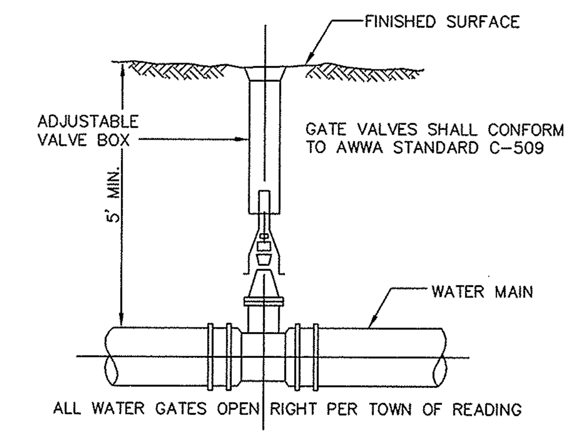

TYPICAL GATE VALVE

NOT TO SCALE

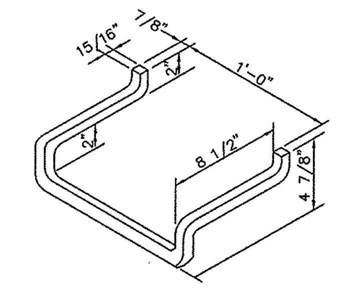

MANHOLE STEP DETAILS

N.T.S.

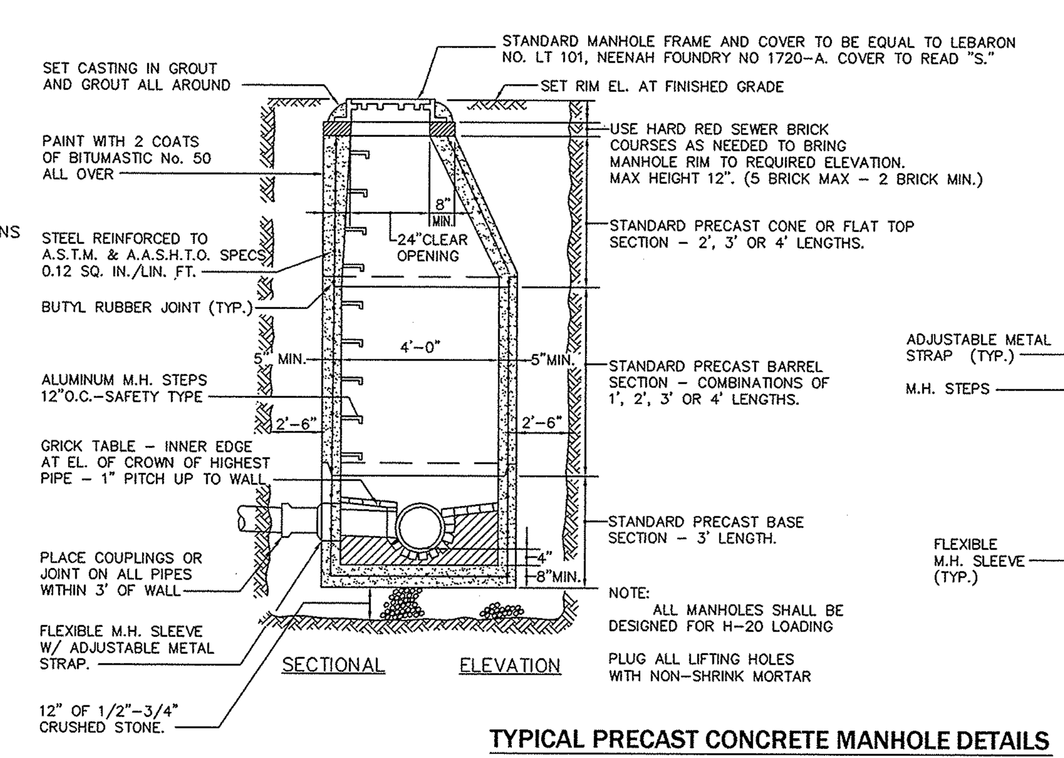

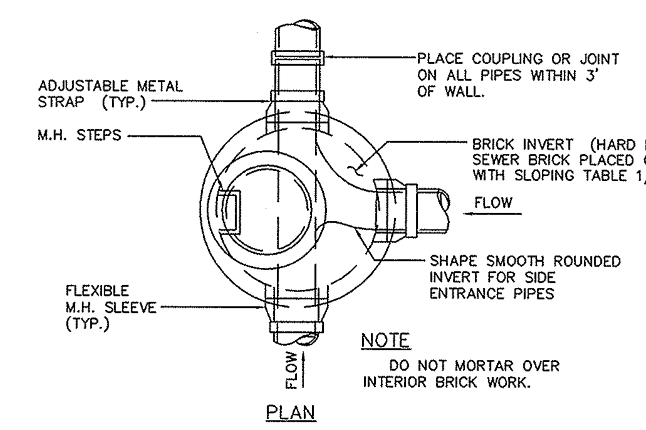

TYPICAL PRECAST CONCRETE MANHOLE DETAILS

N.T.S.

GENERAL SEWER NOTES:

1. GRAVITY SEWER MAIN SHALL BE 8-INCH SDR-35 PVC OR APPROVED EQUAL.
2. SEWERS SHOULD BE KEPT REMOTE FROM PUBLIC WATER SUPPLY WELLS OR OTHER POTABLE WATER SUPPLY SOURCES AND STRUCTURES. WHEREVER FEASIBLE, SEWERS SHOULD BE LAID AT A MINIMUM OF 10 FEET, HORIZONTALLY, FROM ANY EXISTING OR PROPOSED WATER MAIN. SHOULD LOCAL CONDITIONS PREVENT A LATERAL SEPARATION OF 10 FEET TO A WATER MAIN THE WATER MAIN SHOULD BE LAID IN A SEPARATE TRENCH AND THE ELEVATION OF THE CROWN OF THE SEWER PLACED AT LEAST 18" BELOW THE INVERT OF THE WATER MAIN.
3. WHEREVER SEWER MUST CROSS UNDER WATER MAINS, THE SEWER SHOULD BE LAID AT SUCH AN ELEVATION THAT THE CROWN OF THE SEWER IS AT LEAST 18 INCHES BELOW THE INVERT OF THE WATER MAIN. WHEN THE ELEVATION OF THE SEWER CANNOT BE VARIED TO MEET THIS REQUIREMENT, THE WATER MAIN SHOULD BE RELOCATED TO PROVIDE THIS SEPARATION OR CONSTRUCTED WITH MECHANICAL JOINT PIPE FOR A DISTANCE OF 10 FEET ON EACH SIDE OF THE SEWER. ONE FULL LENGTH OF WATER MAIN SHOULD BE CENTERED OVER THE SEWER SO THAT BOTH JOINTS WILL BE AS FAR FROM THE SEWER AS POSSIBLE.
4. ALL EXISTING SEWER LINES TO BE UTILIZED SHALL BE TELEVISION INSPECTED FOR INTEGRITY BEFORE RE-USE. THE TOWN ENGINEERING DIVISION SHALL BE NOTIFIED OF ALL INSPECTIONS 36 HOURS IN ADVANCE. LINES DEEMED UNSUITABLE FOR RE-USE SHALL BE REPLACED IN THEIR ENTIRETY.
5. ALL MANHOLE COVERS SHALL BE TOWN STANDARD COVERS

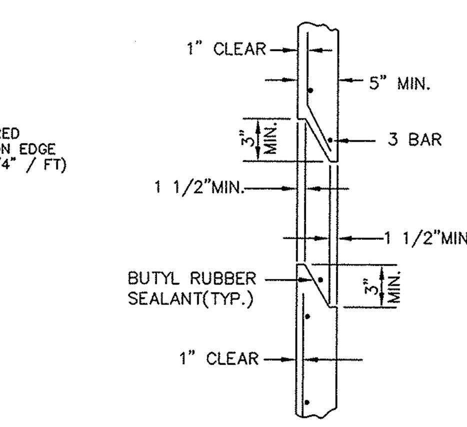

PRECAST STRUCTURE JOINT

N.T.S.

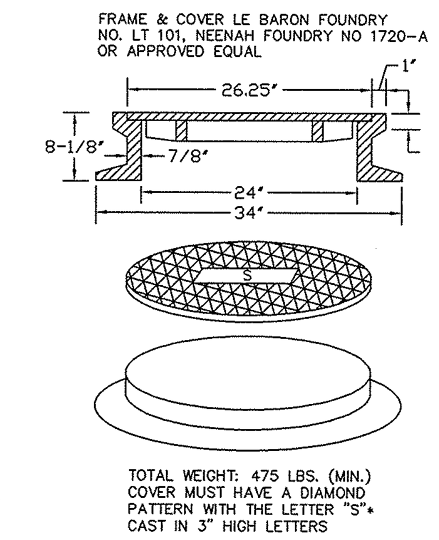

SEWER MANHOLE FRAME & COVER

N.T.S.

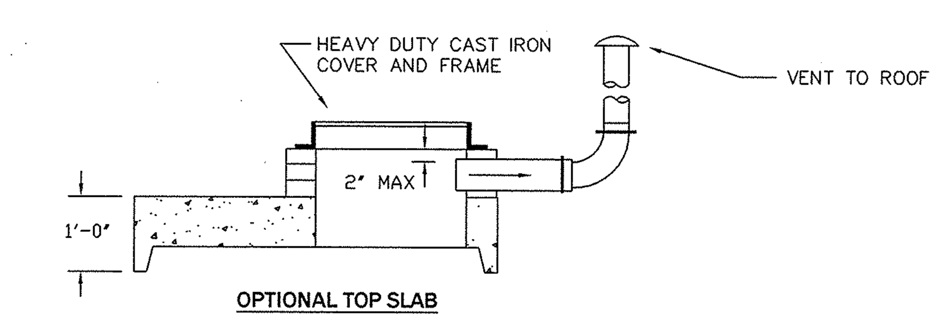

OPTIONAL TOP SLAB

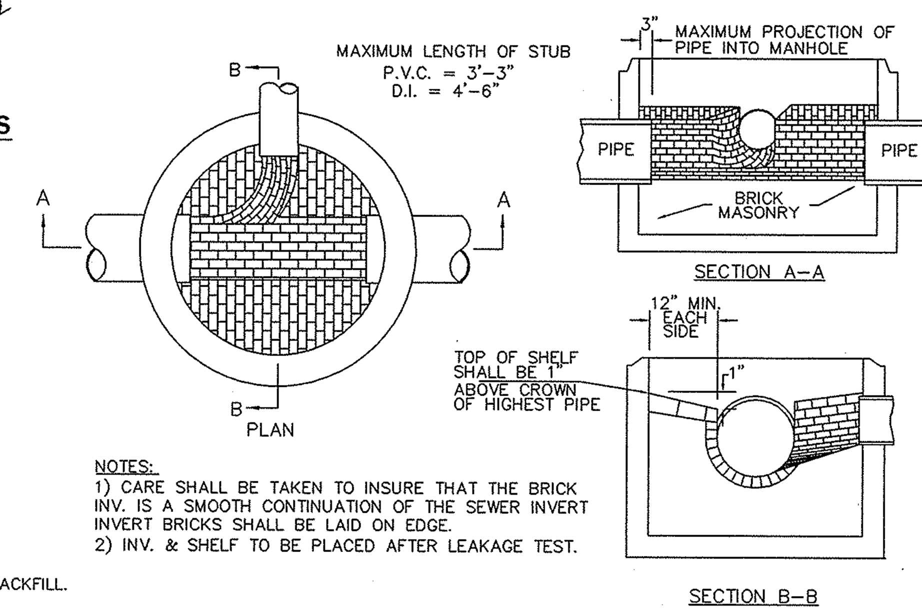

NOTES:
1) CARE SHALL BE TAKEN TO INSURE THAT THE BRICK INV. IS A SMOOTH CONTINUATION OF THE SEWER INVERT INVERT BRICKS SHALL BE LAID ON EDGE.
2) INV. & SHELF TO BE PLACED AFTER LEAKAGE TEST.

BRICK INVERT AT SEWER MANHOLE

N.T.S.

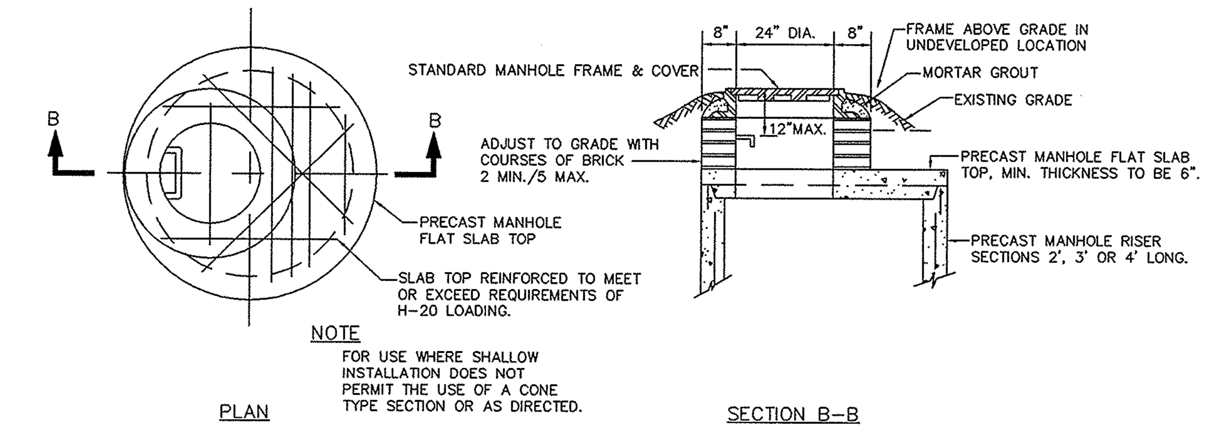

FLAT TOP SECTION

N.T.S.

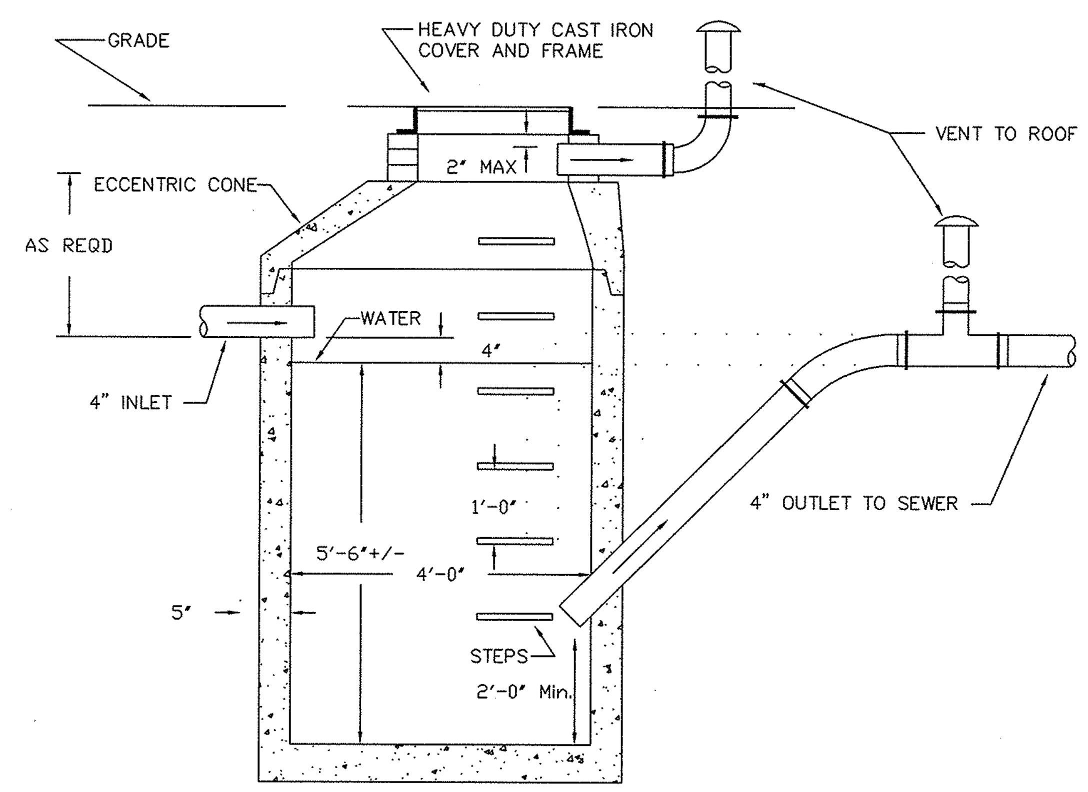

SECTION VIEW

NOTES:

1. CONCRETE: 4,000 PSI MINIMUM AFTER 28 DAYS.
2. MANHOLE DESIGN SPECIFICATIONS CONFORM TO LATEST ASTM C478 SPEC FOR "PRECAST REINFORCED CONCRETE MANHOLE SECTIONS."
3. BUTYL RESIN SECTION JOINT CONFORMS TO LATEST ASTM C443 SPEC.
4. STEEL REINFORCED COPOLYMER POLYPROPYLENE PLASTIC STEP CONFORMS TO LATEST ASTM C478 SPEC.
5. PIPE NOT SUPPLIED.
6. CONE SECTION AVAILABLE IN 4'-0" I.D. ONLY.

OIL AND GREASE SEPARATOR

NOT TO SCALE

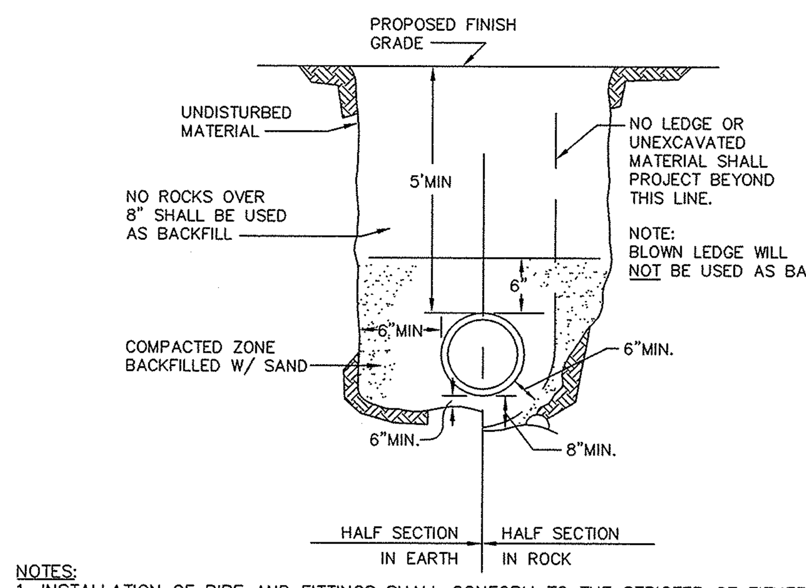

NOTES:
1. INSTALLATION OF PIPE AND FITTINGS SHALL CONFORM TO THE STRICTER OF EITHER AWWA STANDARDS OR MANUFACTURER'S RECOMMENDED INSTALLATION PROCEDURES.
2. PROVIDE AT LEAST ONE IMPERVIOUS DAM IN GRAVEL EVERY 200 FT AND AT ALL JUNCTIONS (ONE ON EACH LEG OF THE JUNCTION) – SEE DETAIL.
3. BEDDING AND BACKFILL SHOWN ON THIS DETAIL REPRESENT MINIMUM REQUIREMENTS AND SHALL BE ADJUSTED IF NECESSARY TO MEET PIPE MANUFACTURER'S REQUIREMENTS.

WATER MAIN TRENCH DETAIL

NOT TO SCALE

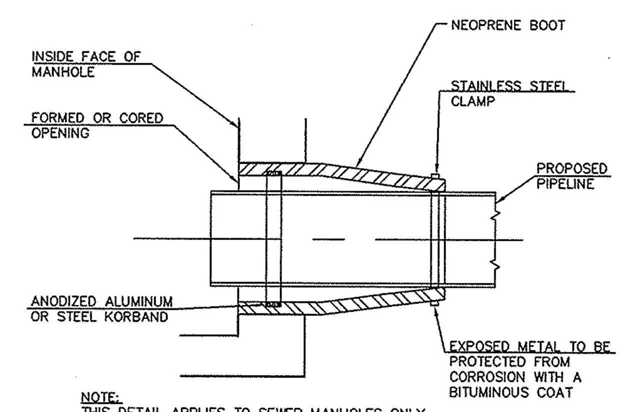

NOTE: THIS DETAIL APPLIES TO SEWER MANHOLES ONLY.

PIPE CONNECTION DETAIL

N.T.S.

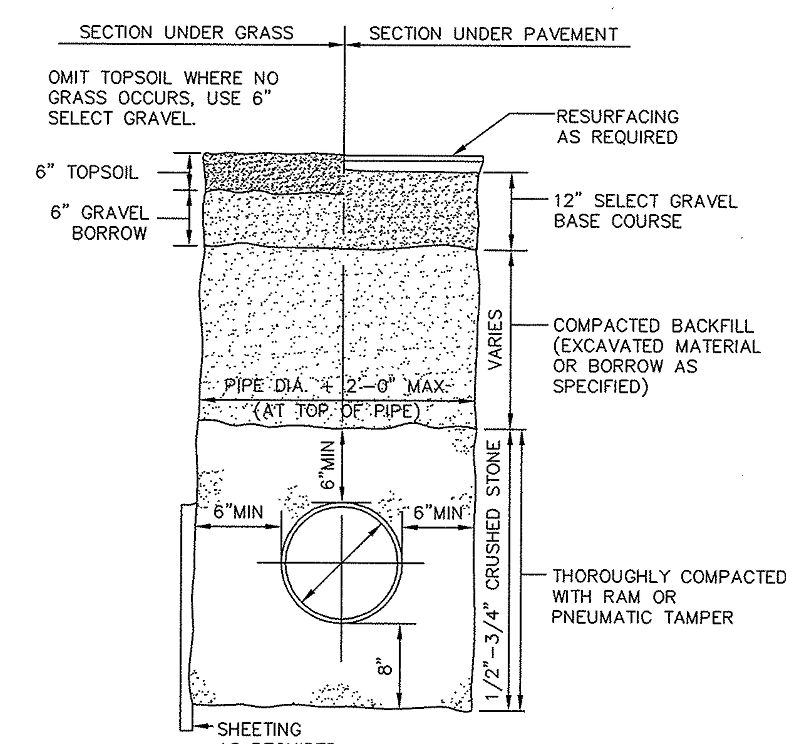

NOTES:
1. PROVIDE AT LEAST ONE IMPERVIOUS DAM IN GRAVEL BEDDING BETWEEN EACH MANHOLE OR EVERY 200 FT, WHICHEVER IS LESS (SEE DETAIL).
2. PROVIDE INSULATION AROUND PIPE WHERE COVER IS LESS THAN 3 FEET.

TYPICAL SEWER TRENCH DETAIL

N.T.S.

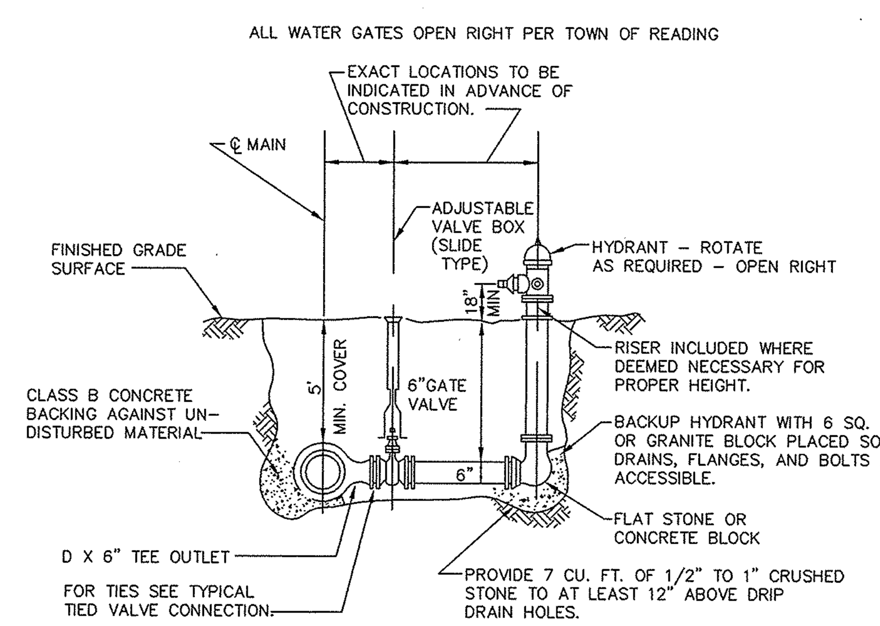

TYPICAL HYDRANT ASSEMBLY DETAIL

NOT TO SCALE

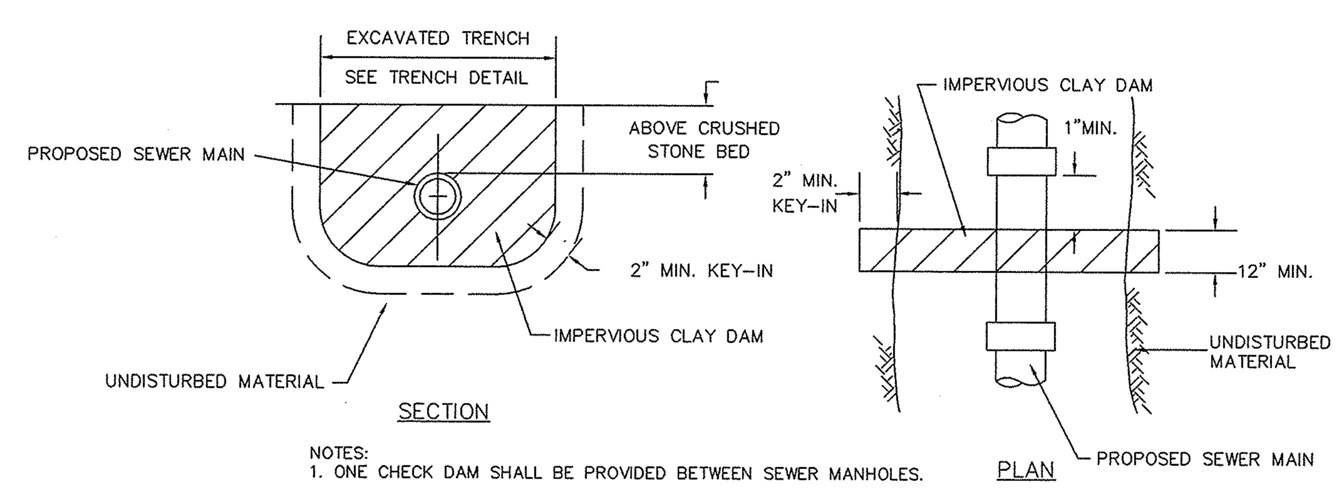

NOTES:
1. ONE CHECK DAM SHALL BE PROVIDED BETWEEN SEWER MANHOLES.

SEWER PIPE TRENCH (CHECK) DAM DETAIL

NOT TO SCALE

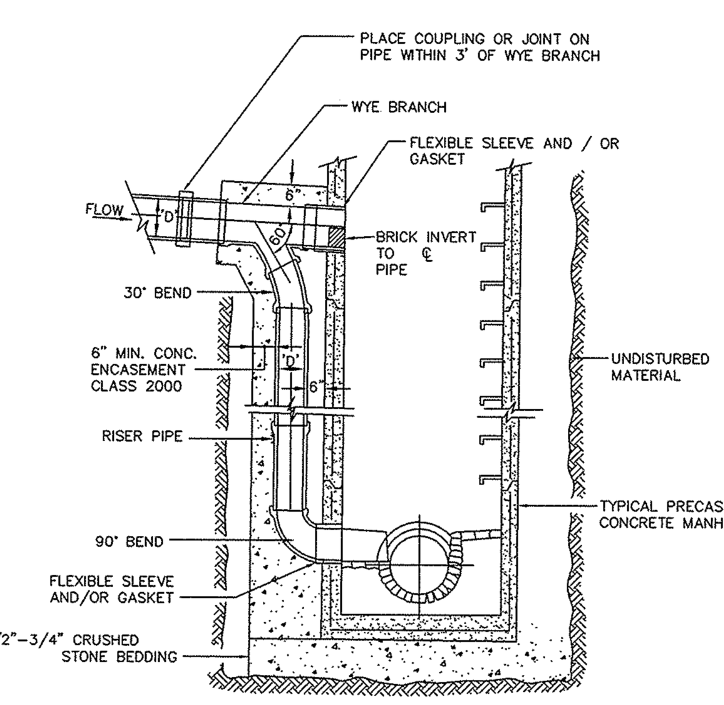

NOTE:
DROP MANHOLES INDICATED AS SUCH ON PLANS.

TYPICAL DROP INLET MANHOLE DETAILS

N.T.S.

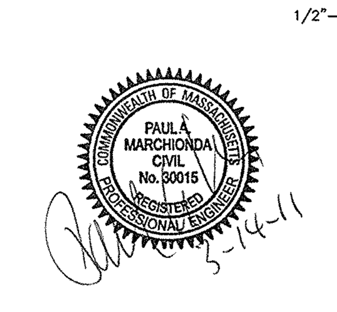

GENERAL WATER NOTES

1. PIPE, FITTINGS, VALVES, JOINTS/PACKING AND FIRE HYDRANTS SHALL CONFORM TO THE TOWN OF READING SPECIFICATIONS. ALL HYDRANTS AND WATER GATE VALVES SHALL OPEN RIGHT.
2. WATER MAINS SHALL BE CEMENT LINED DUCTILE IRON (CLDI), CLASS 52 OR APPROVED EQUAL, 8" DIAMETER UNLESS OTHERWISE NOTED (GASKETED PUSH-ON OR MECHANICAL JOINTS).
3. INSTALLATION OF PIPE AND FITTINGS SHALL CONFORM TO THE STRICTER OF TOWN OF READING STADARDS, AWWA STANDARDS OR MANUFACTURER'S RECOMMENDED INSTALLATION PROCEDURES. ALL WATER MAIN CONSTRUCTION SHALL BE DONE UNDER THE SUPERVISION OF THE DEPARTMENT OF PUBLIC WORKS WATER & SEWER DIVISION.
4. A MINIMUM OF 5 FEET OF COVER SHALL BE MAINTAINED OVER WATER MAIN.
5. THE INSTALLED WATER MAINS SHALL BE PRESSURE TESTED AND LEAK TESTED IN ACCORDANCE WITH AWWA STANDARDS.
6. THE INSTALLED WATER MAINS SHALL BE DISINFECTED IN ACCORDANCE WITH AWWA STANDARDS.
7. THE PROJECT SHALL COMPLY WITH APPLICABLE CROSS-CONNECTION REQUIREMENTS OF THE TOWN OF READING AND THE MASSACHUSETTS DEPARTMENT OF ENVIRONMENTAL PROTECTION.

© 2011 MARCHIONDA & ASSOCIATES, L.P.

REGISTRY USE ONLY

APPROVED BY THE TOWN OF READING PLANNING BOARD

DATE

REV.	DESCRIPTION	DATE
4.	ENGINEERING COMMENTS	3/14/11
3.	CON. COM. REVISIONS	3/9/11
2.	CPDC COMMENTS	2/15/11
1.	CON. COM. REVISIONS	2/8/11

DRW: DSG: CHK:

DETAIL SHEET

READING WOODS
in
READING, MA

Prepared For

PULTE HOMES OF NEW ENGLAND, L.L.C.
115 FLANDERS ROAD
WESTBORO, MA 01581

Marchionda & Associates, L.P.
Engineering and Planning Consultants
62 Montvale Avenue
Suite I
Stoneham, MA 02180
TEL: (781) 438-6121
FAX: (781) 438-9654
Email: engineering@marchionda.com
Website: www.marchionda.com

DATE: 1/4/11

H:\PROJECTS\487-187\PB PLAN SET 3-14-2011\DETAILS.DWG

M. & A. NO.: 487-187 | SCALE: NOT TO SCALE

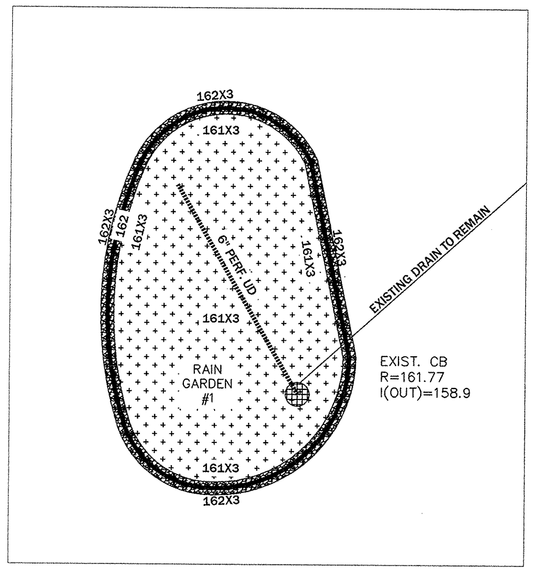

RAIN GARDEN #1
SCALE: 1" = 10'

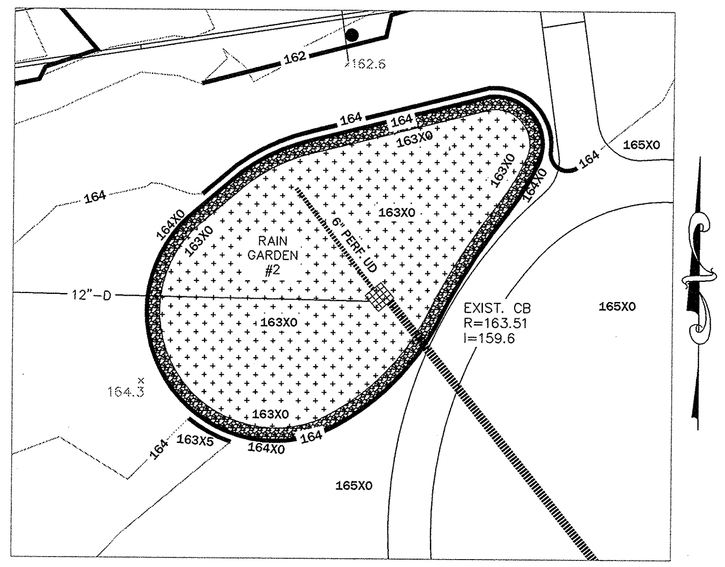

RAIN GARDEN #2
SCALE: 1" = 10'

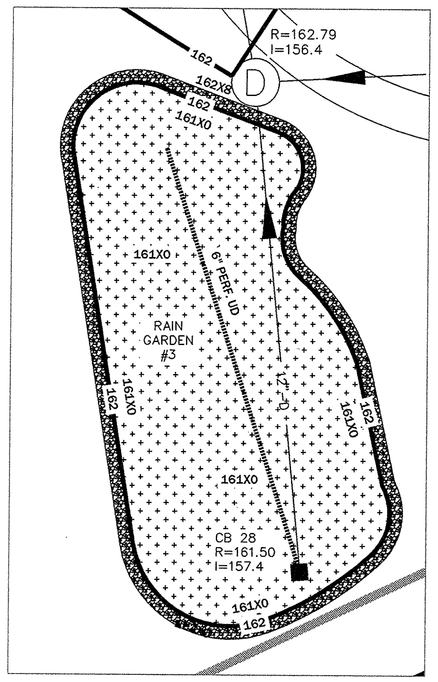

RAIN GARDEN #3
SCALE: 1" = 10'

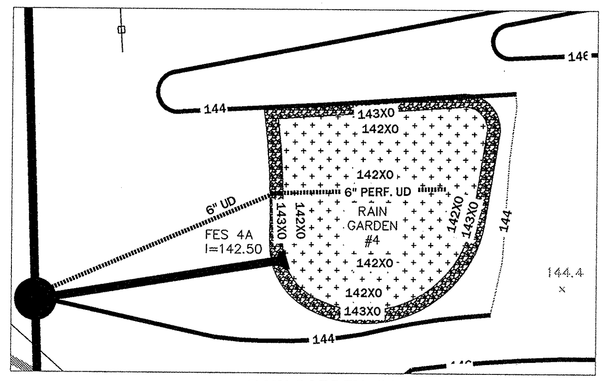

RAIN GARDEN #4
SCALE: 1" = 10'

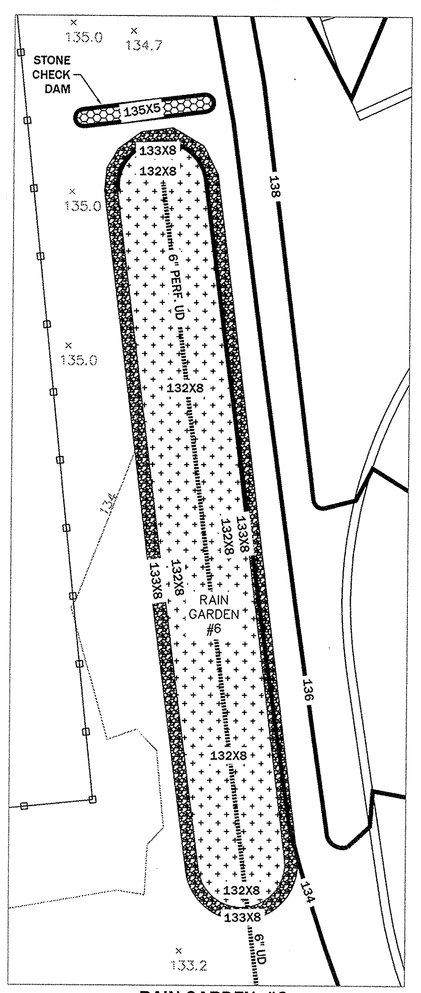

RAIN GARDEN #6
SCALE: 1" = 10'

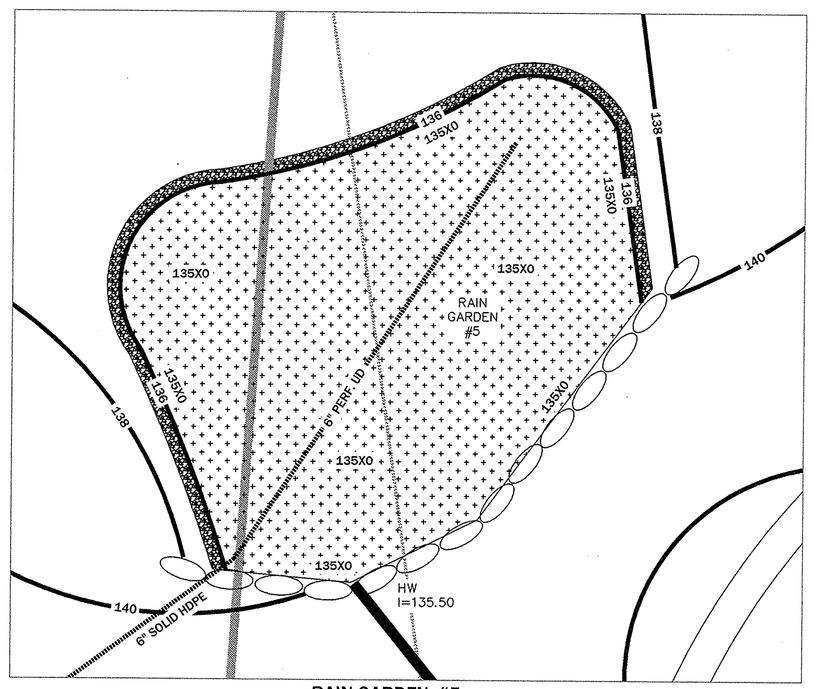

RAIN GARDEN #5
SCALE: 1" = 10'

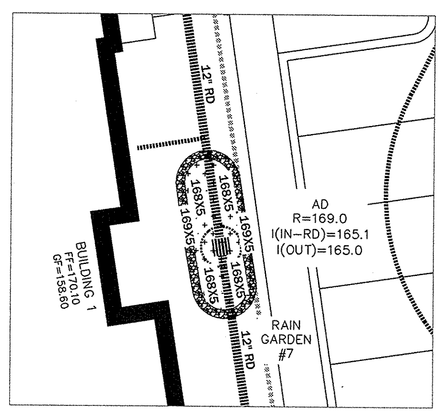

RAIN GARDEN #7
SCALE: 1" = 10'

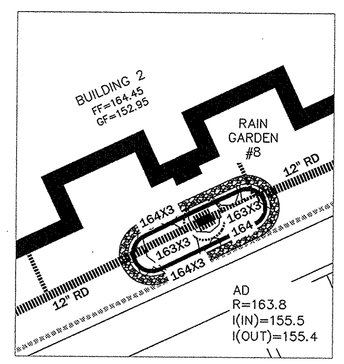

RAIN GARDEN #8
SCALE: 1" = 10'

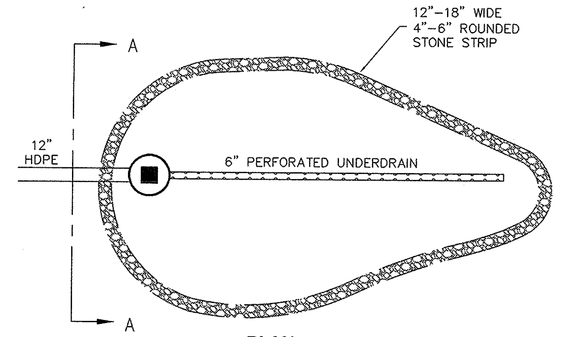

PLAN
N.T.S.

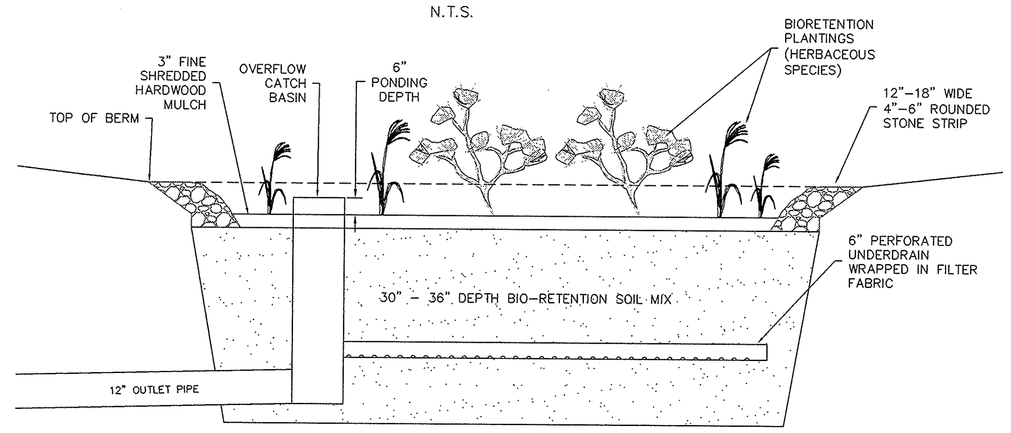

SECTION A-A
N.T.S.

SOIL MIX SAND COMPONENT

SIEVE	% PASSING
#4	100
#50	10-100
#100	0-20
#200	0-5

BIORETENTION AREA DESIGN NOTES:
1. THE BIORETENTION HERBACEOUS SPECIES PLANTINGS SHALL BE SELECTED FROM THE RECOMMENDED SPECIES LISTED IN THE DEP STORMWATER MANUAL AND APPROVED BY THE LANDSCAPE ARCHITECT
2. THE BIORETENTION SOIL SHALL CONSIST OF A MEDIA MIX MADE UP OF 85-88% SANDS, 8-12% FINES, AND 3-5% ORGANIC MATTER. THE SOIL SHOULD HAVE A pH BETWEEN 5.5 AND 6.5.
3. ANY UNSUITABLE FILL MATERIALS (SUCH AS ORGANICS, STUMPS, ETC.) THAT EXIST BELOW THE INFILTRATION SYSTEM SHALL BE REMOVED TO EXPOSE THE EXISTING SUBGRADE. THE AREA SHALL THEN BE BUILT UP TO PROPOSED SUBGRADE WITH MATERIAL MEETING THE FOLLOWING SPECIFICATION, UNLESS OTHERWISE APPROVED BY THE ENGINEER:

TYPICAL BIO-RETENTION/RAIN GARDEN DETAIL
NOT TO SCALE

BIORETENTION / RAIN GARDEN PLANT LIST

1. PLANTINGS WITHIN EACH OF THE EIGHT (8) BIORETENTION / RAIN GARDEN AREAS SHALL BE AS OUTLINED BELOW. ALL PLANT MATERIAL SHALL BE APPROVED BY THE LANDSCAPE ARCHITECT PRIOR TO INSTALLATION.

PLANT MATERIAL	SIZE	QUANTITY RG#1	RG#2	RG#3	RG#4	RG#5	RG#6	RG#7	RG#8	TOTAL
ACER RUBRUM - RED MAPLE	1.5-2" CAL.	3	3	2	1	3	4	-	-	16
AMELANCHIER CANDENSIS - SHADBLOW	4-5' HT.	6	6	4	3	12	6	-	-	42
VACCINIUM CORYBOSUM - HIGHBUSH BLUEBERRY	#3 POT	22	22	30	12	50	22	3	3	164
VIBURNUM DENTATUM - ARROWWOOD	2"-3' HT.	13	13	20	7	26	13	2	2	96
CORNUS AMOMUM (SILKY DOGWOOD)	2"-3' HT.	8	8	12	5	23	8	2	2	68
NEW ENGLAND ASTER	#1 POT	12	12	16	7	20	14	2	2	87
MARSH MARIGOLD	#1 POT	10	10	15	6	24	11	4	4	84
TUSSOCK SEDGE	#1 POT	8	8	12	5	18	6	4	4	65
TURTLE HEAD	#1 POT	8	8	12	5	23	8	6	6	76
BUTTERFLY WEED	#1 POT	9	9	14	6	19	12	2	2	73
BEE BALM	#1 POT	12	12	16	8	24	10	4	4	92

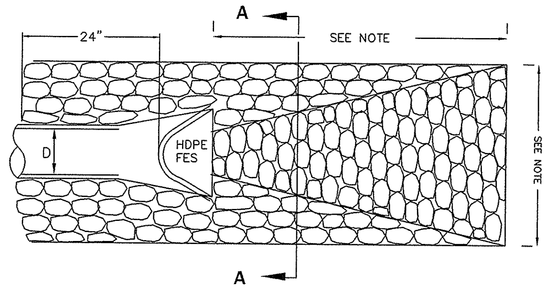

W/FLARED END SECTION

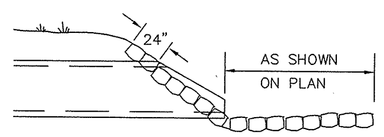

PROFILE

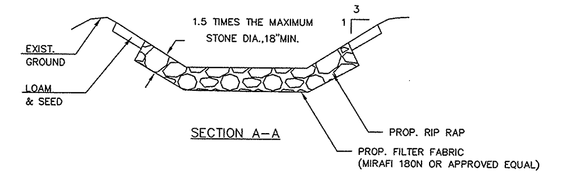

SECTION A-A

NOTES:
1. REFER TO SITE PLAN FOR ACTUAL APRON LENGTH AND WIDTH (VARIES BY LOCATION).
2. RIPRAP SHALL CONFORM TO MHD M2.02.3 "STONE FOR PIPE ENDS".

RIP - RAP APRON DETAIL
NOT TO SCALE

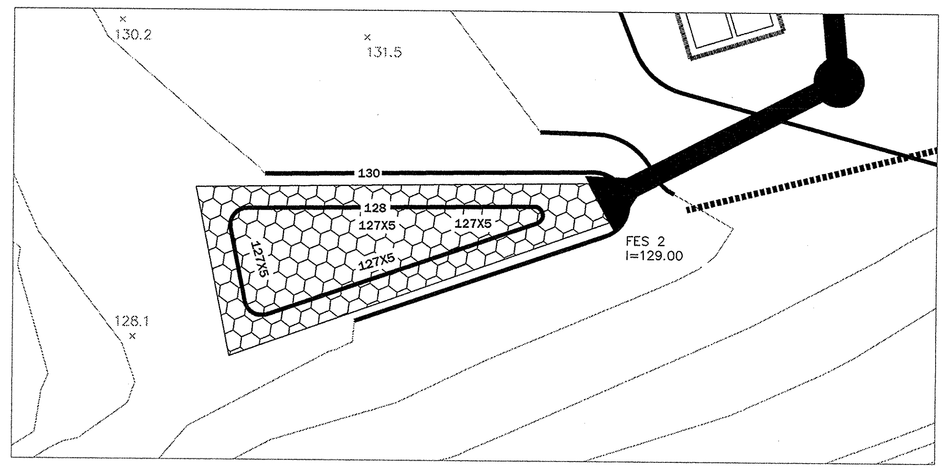

FES #2
SCALE: 1" = 10'

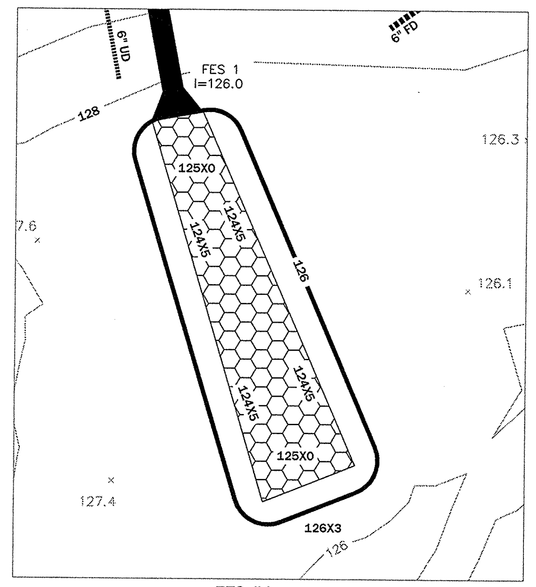

FES #1
SCALE: 1" = 10'

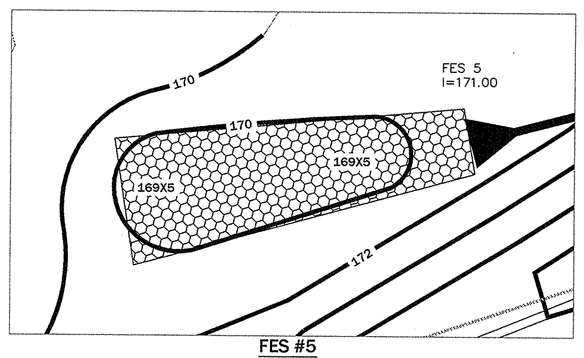

FES #5
SCALE: 1" = 10'

10 5 0 10 20 30
SCALE: 1" = 10'

REGISTRY USE ONLY

APPROVED BY THE TOWN OF READING PLANNING BOARD

DATE

REV.	DESCRIPTION	DATE
4.	ENGINEERING COMMENTS	3/14/11
3.	CON. COM. REVISIONS	3/9/11
2.	CPDC COMMENTS	2/15/11
1.	CON. COM. REVISIONS	2/8/11

DRW: DSG: CHK:

DETAIL SHEET

READING WOODS
in
READING, MA

Prepared For
PULTE HOMES OF NEW ENGLAND, L.L.C.
115 FLANDERS ROAD
WESTBORO, MA 01581

Marchionda & Associates, L.P.
Engineering and Planning Consultants
62 Montvale Avenue
Suite I
Stoneham, MA 02180
TEL: (781) 438-6121
FAX: (781) 438-9654
Email: engineering@marchionda.com
Website: www.marchionda.com

COMMONWEALTH OF MASSACHUSETTS PAUL R. MARCHIONDA Date No. 30016 Registered Professional Engineer 3-14-11

DATE: 1/4/11
H:\PROJECTS\487-187\PB PLAN SET 3-14-2011\DETAILS.DWG
M. & A. NO.: 487-187 | SCALE: AS NOTED
SHEET 24 OF 34

© 2011 MARCHIONDA & ASSOCIATES, L.P.

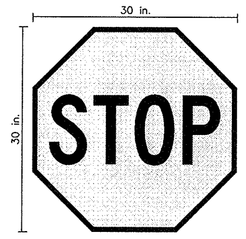

R1-1

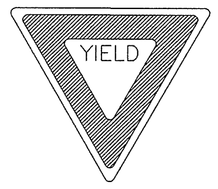

R1-2
(30" x 30")

R3-4
(12" x 12")

R7-1

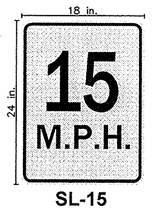

SL-15

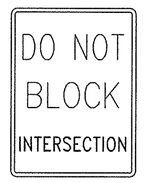

R10-7
(18" x 24")

W17-1

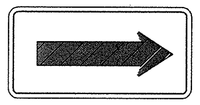

W1-6R
(12" x 24")

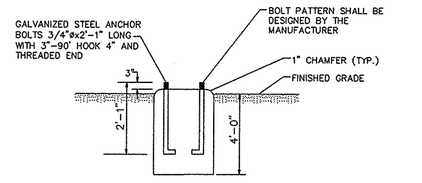

ELEVATION

NOTES:
1. DISTANCE FROM CENTERLINE OF FOUNDATION TO FACE OF CURB TO BE 3'-0" (MIN.). SEE LIGHTING PLAN FOR LUMINAIRE LOCATIONS.
2. FOUNDATION AND ANCHOR BOLT SIZING MAY BE VARIED AS RECOMMENDED BY POLE MANUFACTURER.
3. SEE LIGHTING PLAN FOR LUMINAIRE AND POLE SPECIFICATIONS.

LUMINAIRE FOUNDATION DETAILS
N.T.S.

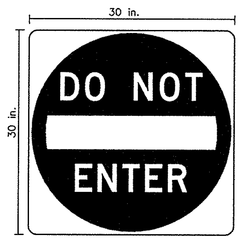

R5-1

SPECIAL(DEVO)
(18" x 24")

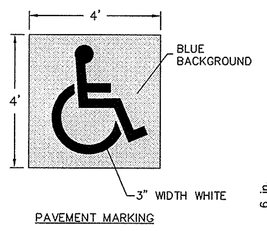

PAVEMENT MARKING

SPECIAL (HP)

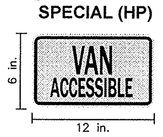

R7-8a

SIGNAGE

NOTES:
1. REFER TO LAYOUT PLANS FOR LOCATIONS OF ACCESSIBLE SURFACE PARKING SPACES, AND ARCHITECTURAL PLANS FOR LOCATIONS OF ACCESSIBLE GARAGE SPACES.
2. EACH ACCESSIBLE SPACE SHALL INCLUDE PAVEMENT MARKING AND SIGNAGE.

ACCESSIBLE PARKING SPACE DESIGNTATION
N.T.S.

TEMPORARY SIGNS

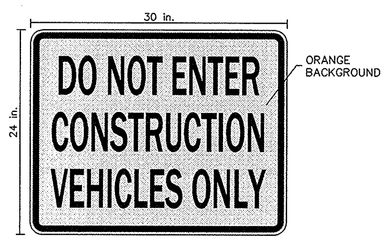

CONSTRUCTION VEHICLES ONLY SIGN (CVO)
N.T.S.

4'x4' HARD HAT SIGN (T-4)
N.T.S.

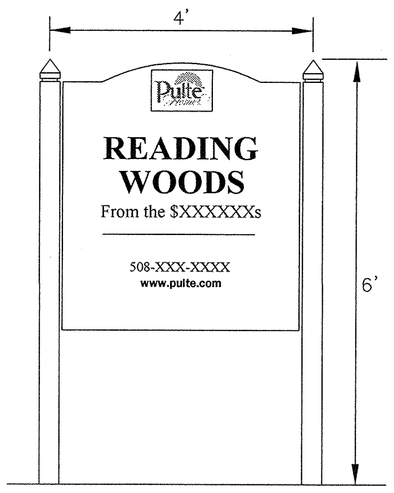

TEMPORARY COMMUNITY SIGN (T-1)
N.T.S.

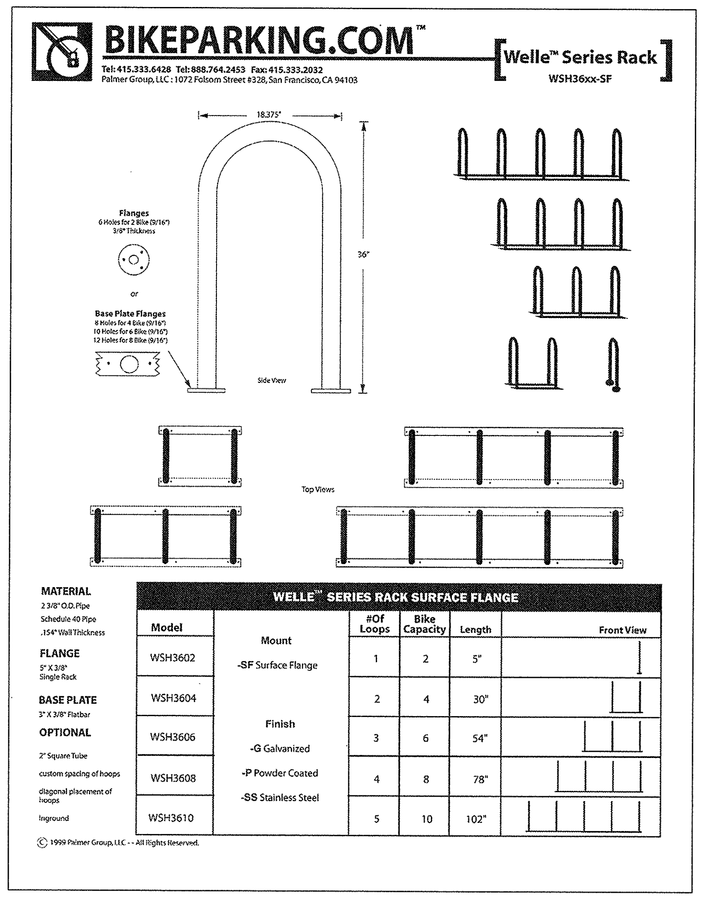

MATERIAL	WELLE™ SERIES RACK SURFACE FLANGE					
2 3/8" O.D. Pipe Schedule 40 Pipe .154"-118 Thickness	Model	Mount	#Of Loops	Bike Capacity	Length	Front View
FLANGE 3" X 3/8" Single Rack	WSH3602	-SF Surface Flange	1	2	5"	
BASE PLATE 3" X 3/8" Flatbar	WSH3604		2	4	30"	
OPTIONAL 2" Square Tube	WSH3606	Finish -G Galvanized	3	6	54"	
custom spacing of hoops	WSH3608	-P Powder Coated	4	8	78"	
diagonal placement of hoops	WSH3610	-SS Stainless Steel	5	10	102"	
Inground						

© 1999 Palmer Group, LLC -- All Rights Reserved.

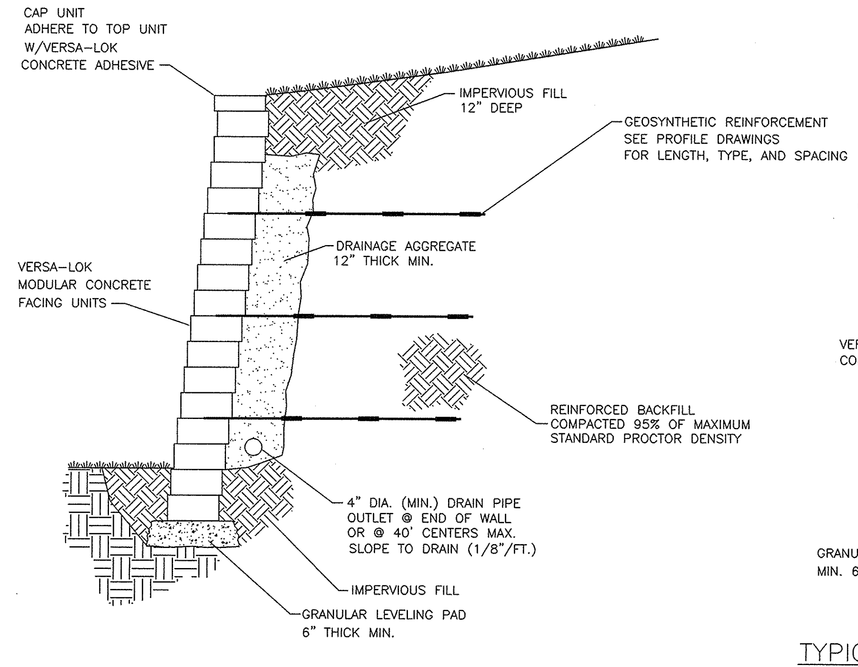

TYPICAL SECTION–REINFORCED RETAINING WALL
MODULAR CONCRETE UNIT
SCALE: NONE

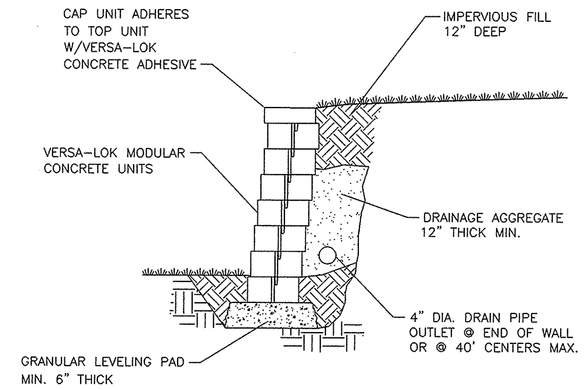

TYPICAL SECTION–UNREINFORCED RETAINING WALL
SCALE: NONE

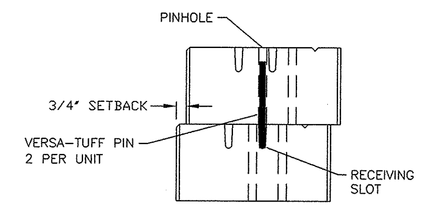

PINNING DETAIL
CROSS SECTION
SCALE:NONE

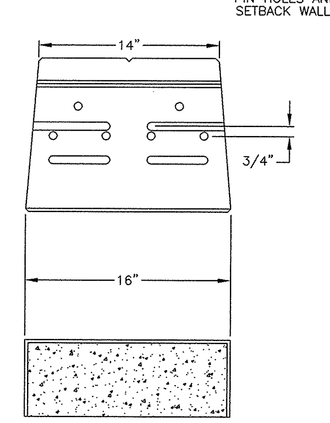

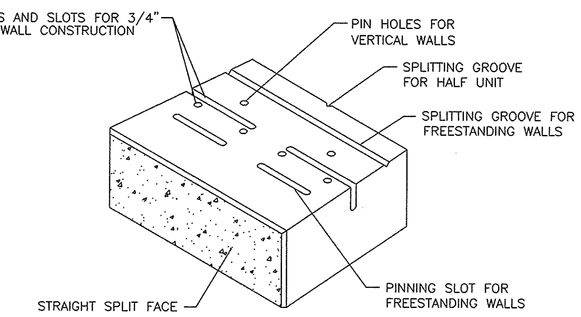

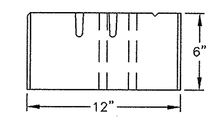

VERSA-LOK UNIT
UNIT DIMENSIONS
SCALE: NONE

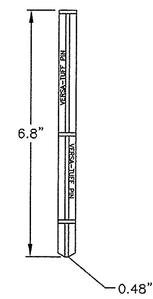

VERSA-TUFF PIN
PIN DIMENSIONS
SCALE: NONE

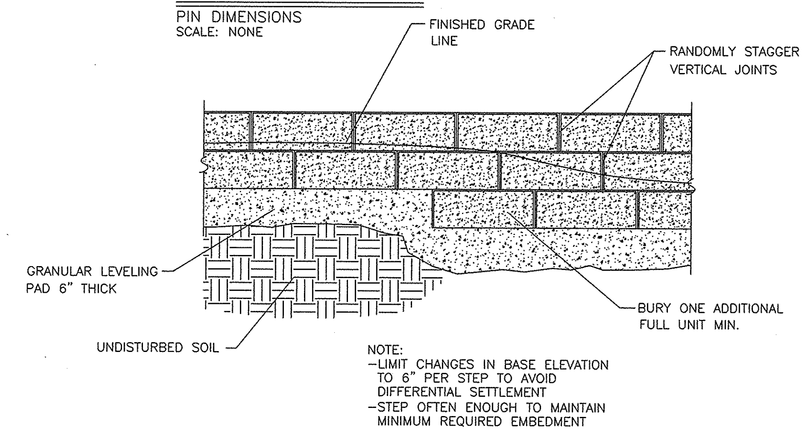

NOTE:
–LIMIT CHANGES IN BASE ELEVATION TO 6" PER STEP TO AVOID DIFFERENTIAL SETTLEMENT
–STEP OFTEN ENOUGH TO MAINTAIN MINIMUM REQUIRED EMBEDMENT

STEPPING BASE DETAIL
SCALE: NONE

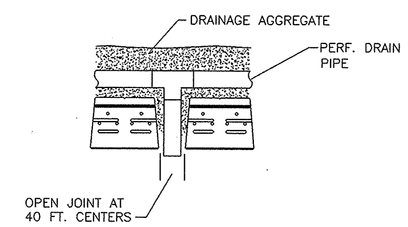

DRAIN DETAIL
WALLS OVER 4'
SCALE: NONE

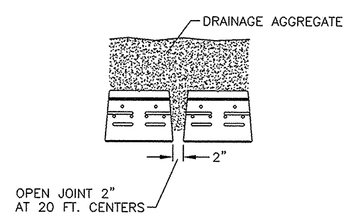

DRAIN DETAIL
WALLS UNDER 4' (IF REQUIRED)
SCALE: NONE

NOTES:

1) WALL TO BE VERSA-LOCK OR APPROVED EQUAL.
2) THIS DETAIL CONTAINS SEVERAL CONSTRUCTION DETAILS WHICH ARE INTENDED AS AN AID. FINAL DETERMINATION OF THE SUITABILITY OF ANY INFORMATION OR MATERIAL FOR THE USE CONTEMPLATED, AND ITS MANNER OF USE, IS THE SOLE RESPONSIBILITY OF THE USER. A FINAL PROJECT SPECIFIC DESIGN SHOULD BE PREPARED BY A QUALIFIED, LICENSED, PROFESSIONAL ENGINEER.

ENGINEERED WALL DETAILS
N.T.S.

REGISTRY USE ONLY

APPROVED BY THE TOWN OF READING PLANNING BOARD

DATE

DRW:	CHK:	DSG:	REV.	DESCRIPTION	DATE
			4.	ENGINEERING COMMENTS	3/14/11
			3.	CON. COM. REVISIONS	3/9/11
			2.	CPDC COMMENTS	2/15/11
			1.	CON. COM. REVISIONS	2/8/11

DETAIL SHEET

READING WOODS
in
READING, MA
Prepared For
PULTE HOMES OF NEW ENGLAND, L.L.C.
115 FLANDERS ROAD
WESTBORO, MA 01581

Marchionda & Associates, L.P.
Engineering and Planning Consultants
62 Montvale Avenue
Suite I
Stoneham, MA 02180
TEL: (781) 438-6121
FAX: (781) 438-9654
Email: engineering@marchionda.com
Website: www.marchionda.com

DATE: 1/4/11
H:\PROJECTS\487-187\PB PLAN SET 3-14-2011\DETAILS.DWG
M. & A. NO.: 487-187 | SCALE: NOT TO SCALE

© 2011 MARCHIONDA & ASSOCIATES, L.P.

1) PLACE EROSION CONTROL AROUND RESOURCE AREA.
2) BEGIN BUILDING DEMOLITION.
3) BEGIN PERIMETER FENCE INSTALLATION
4) STABILIZE ALL EXPOSED SOILS
5) WITH THE EXCEPTION OF THE AREA SHOWN, CUT TREES WITHIN THE LIMIT OF WORK.
6) BEGIN NEW ENTRY WAY CONSTRUCTION

COMMONWEALTH OF MASSACHUSETTS
PAUL A. MARCHIONDA
CIVIL
No. 30015
REGISTERED PROFESSIONAL ENGINEER
3-14-11

REGISTRY USE ONLY

APPROVED BY THE TOWN OF READING PLANNING BOARD

DATE

REV.	DESCRIPTION	DATE
4.	ENGINEERING COMMENTS	3/14/11
3.	CON. COM. REVISIONS	3/9/11
2.	CPDC COMMENTS	2/15/11
1.	CON. COM. REVISIONS	2/8/11

DRW: DSG: CHK:

SEQUENCE 1

READING WOODS
in
READING, MA

Prepared For
PULTE HOMES OF NEW ENGLAND, L.L.C.
115 FLANDERS ROAD
WESTBORO, MA 01581

Marchionda & Associates, L.P.
Engineering and Planning Consultants
62 Montvale Avenue
Suite I
Stoneham, MA 02180
TEL: (781) 438-6121
FAX: (781) 438-9654
Email: engineering@marchionda.com
Website: www.marchionda.com

DATE: 1/4/11
H:\PROJECTS\487-187\PB PLAN SET 3-14-2011\SEQUENCE1.DWG
M. & A. NO.: 487-187 | SCALE: NOT TO SCALE
SHEET 26 OF 34

© 2011 MARCHIONDA AND ASSOCIATES, L.P.

1) INSTALL SILT SACKS IN ALL ONSITE CATCHBASINS AND IN CATCHBAINS ALONG THE SITE SIDE OF SOUTH STREET(BETWEEN JACOB & STURGESS).
2) EXCEPT FOR JABOB WAY (START TO STA.12+50), MILL PAVEMENT & STOCKPILE IN DESIGNATED AREA.
3) TEMPORARILY LOAM & SEED AREAS THAT WILL BE DORMENT DURRING THE REMAINDER OF THIS PHASE. PROVIDE TRACKING PADS AT THE END OF CONSTRUCTION ROUTES PRIOR TO JACOB WAY.
4) PLANT AREAS OF 30 FT. BUFFER THAT WILL NOT INTERFERE WTH FUTURE CONSTRUCTION. AS CONSTRUCTION MOVES FORWARD, PLANT 30 FT. BUFFER AS SOON AS PRACTICAL.
5) CONSTRUCT OUTLET APRON & DRAINLINE FROM FES# 1 TO EXISTING DMH(BEHIND BLDG.4). BEGIN CONSTRUCTION OF SEDIMENT PONDS.
6) CONSTRUCT OUTLET APRON & DRAIN TRUNKLINE FROM FES#2 TO JACOB WAY. TEMPORARILY PLUG PIPE OUT OF DMH#18. TEMPORARILY CONNECT EXISTING 15" DRAIN IN JACOB WAY TO CB#20.
7) INSTALL ADDITIONAL EROSION CONTROLS. BEGIN FOUNDATION WORK FOR BUILDINGS IN PHASE. EXTEND UTILITIES TO BUILDINGS. PREPARE ACCESS DRIVES.
8) CONSTRUCT RAIN GARDENS #1 & #4. ALLOW ENOUGH TIME FOR RAIN GARDENS TO ESTABLISH BEFORE DIRECTING DRAINAGE INTO THESE AREAS.
9) PAVE ACCESS DRIVES. STABILIZE AREAS AS SOON AS PRACTICAL.
10) GRIND JACOB WAY. INSTALL NEW UTILITIES. DISCONNECT 15" DRAIN FROM CB 20. PAVE JACOB TO NEW ENTRANCE WAY
11) REMOVE SEDIMENT BASINS 2 & 3. CONSTRUCT LANDSCAPE BERMS WHERE PRACTICAL. PROVIDE PERMANENT STABILIZATION.
12) INSTALL RECHARGE AREAS & DOWNSPOUTS. PERMANENTLY STABILIZE AREAS AROUND BUILDINGS AND RECHARGE. PLUG INLET PIPES TO RECHARGE AREAS UNTIL CONTRIBUTING AREAS ARE STABLE.

COMMONWEALTH OF MASSACHUSETTS
PAUL A. MARCHIONDA
CIVIL
No. 30016
REGISTERED PROFESSIONAL ENGINEER
3-14-11

REGISTRY USE ONLY

APPROVED BY THE TOWN OF READING PLANNING BOARD

DATE

DRW:	DSG:	CHK:	REV.	DESCRIPTION	DATE
			4.	ENGINEERING COMMENTS	3/14/11
			3.	CON. COM. REVISIONS	3/9/11
			2.	CPDC COMMENTS	2/15/11
			1.	CON. COM. REVISIONS	2/8/11

SEQUENCE 2

READING WOODS
in
READING, MA

Prepared For

PULTE HOMES OF NEW ENGLAND, L.L.C.
115 FLANDERS ROAD
WESTBORO, MA 01581

Marchionda & Associates, L.P.
Engineering and Planning Consultants
62 Montvale Avenue
Suite I
Stoneham, MA 02180
TEL: (781) 438-6121
FAX: (781) 438-9654
Email: engineering@marchionda.com
Website: www.marchionda.com

DATE: 1/4/11

H:\PROJECTS\487-187\PB PLAN SET 3-14-2011\SEQUENCE2.DWG

M. & A. NO.: 487-187 | SCALE: NOT TO SCALE

SHEET 27 OF 34

© 2011 MARCHIONDA AND ASSOCIATES, L.P.

1) PREPARE BUILDING PAD. PREPARE & STABILIZE CUT SLOPE BEHIND BUILDING. CONSTRUCT ACCESS DRIVE UTILITIES.
2) CONSTRUCT FOUNDATION.
3) CONTRUCT DRIVEWAY & UTILITIES. PAVE PARKING AREA.
4) INSTALL ROOF DRAIN LINES. PLACE SILT SACKS IN AREA DRAINS UNITL CONTRIBUTING AREAS ARE STABILIZED.
5) ESTABLISH FINAL GRADES AROUND BUILDINGS AND PERMANENTLY STABILIZE AREA.

REGISTRY USE ONLY

APPROVED BY THE TOWN OF READING PLANNING BOARD

DATE

REV.	DESCRIPTION	DATE
4.	ENGINEERING COMMENTS	3/14/11
3.	CON. COM. REVISIONS	3/9/11
2.	CPDC COMMENTS	2/15/11
1.	CON. COM. REVISIONS	2/8/11

DRW: DSG: CHK:

SEQUENCE 3

READING WOODS
in
READING, MA

Prepared For

PULTE HOMES OF NEW ENGLAND, L.L.C.
115 FLANDERS ROAD
WESTBORO, MA 01581

Marchionda & Associates, L.P.
Engineering and Planning Consultants
62 Montvale Avenue
Suite I
Stoneham, MA 02180
TEL: (781) 438-6121
FAX: (781) 438-9654
Email: engineering@marchionda.com
Website: www.marchionda.com

DATE: 1/4/11

H:\PROJECTS\487-187\PB PLAN SET 3-14-2011\SEQUENCE3.DWG

M. & A. NO.: 487-187 | SCALE: NOT TO SCALE

SHEET 28 OF 34

© 2011 MARCHIONDA AND ASSOCIATES, L.P.

1) REPLACE OLD STANDPIPE WITH NEW STANDPIPE. CUT REMAINER OF TREES.
2) PLACE FILL FOR ACCESS DRIVES. INSTALL UTILITIES UNDER ACCESS DRIVE.
3) BEGIN FOUNDATION CONSTRUCTION.
4) PAVE ACCESS DRIVE. PLUG INLET PIPES TO RECHARGE BASINS. FORM SIDESLOPES ALONG CURTIS ST ABUTTERS. PERMANENTLY STABILIZE SIDESLOPE AND PLANT BUFFER PER LANDSCAPING PLANS. CONSTRUCT RAIN GARDEN#6.
5) CONSTRUCT RECHARGE BASIN #8 ALONG WITH ROOF DRAINS.
6) PLANT WETLAND BUFFER AND CONDUCT WETLAND ENHANCEMENT(IF REQUIRED).
7) ESTABLISH FINAL GRADES AROUND BUILDING AND PERMANENTLY STABILIZE.

© 2011 MARCHIONDA AND ASSOCIATES, L.P.

REGISTRY USE ONLY

APPROVED BY THE TOWN OF READING PLANNING BOARD

DATE

REV.	DESCRIPTION	DATE
4	ENGINEERING COMMENTS	3/14/11
3	CON. COM. REVISIONS	3/9/11
2	CPDC COMMENTS	2/15/11
1	CON. COM. REVISIONS	2/8/11

DRW: DSG: CHK:

SEQUENCE 4

READING WOODS
in
READING, MA

Prepared For

PULTE HOMES OF NEW ENGLAND, L.L.C.
115 FLANDERS ROAD
WESTBORO, MA 01581

Marchionda
& Associates, L.P.
Engineering and Planning Consultants

62 Montvale Avenue
Suite I
Stoneham, MA 02180
TEL: (781) 438-6121
FAX: (781) 438-9654
Email: engineering@marchionda.com
Website: www.marchionda.com

COMMONWEALTH OF MASSACHUSETTS
PAUL N. MARCHIONDA
CIVIL
No. 30016
REGISTERED PROFESSIONAL ENGINEER
3-14-11

DATE: 1/4/11

H:\PROJECT\487-187\PB PLAN SET 3-14-2011\SEQUENCE4.DWG

M. & A. NO.: 487-187 | SCALE: NOT TO SCALE

SHEET 29 OF 34

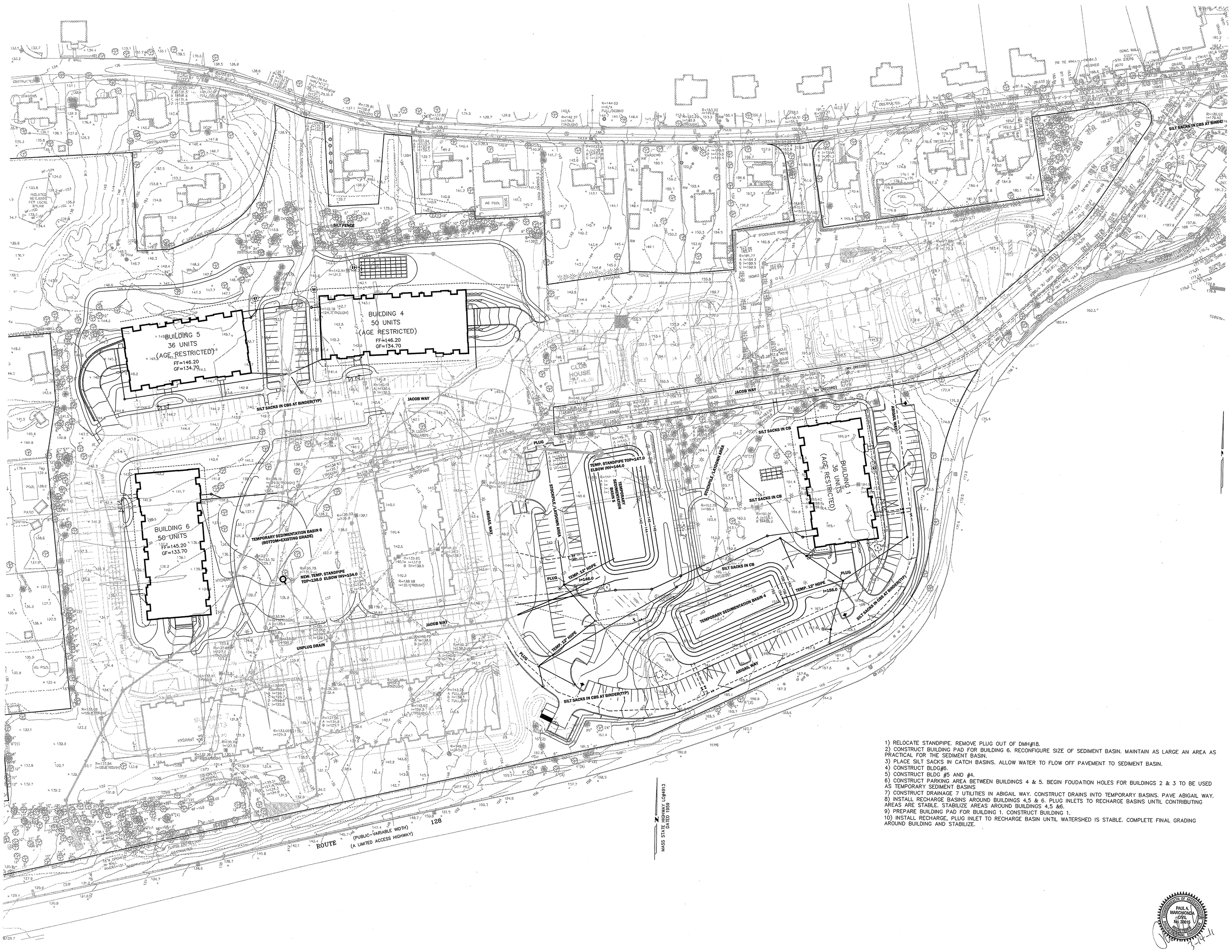

1) RELOCATE STANDPIPE. REMOVE PLUG OUT OF DMH#18.
2) CONSTRUCT BUILDING PAD FOR BUILDING 6. RECONFIGURE SIZE OF SEDIMENT BASIN. MAINTAIN AS LARGE AN AREA AS PRACTICAL FOR THE SEDIMENT BASIN.
3) PLACE SILT SACKS IN CATCH BASINS. ALLOW WATER TO FLOW OFF PAVEMENT TO SEDIMENT BASIN.
4) CONSTRUCT BLDG#6.
5) CONSTRUCT BLDG #5 AND #4.
6) CONSTRUCT PARKING AREA BETWEEN BUILDINGS 4 & 5. BEGIN FOUDATION HOLES FOR BUILDINGS 2 & 3 TO BE USED AS TEMPORARY SEDIMENT BASINS
7) CONSTRUCT DRAINAGE 7 UTILITIES IN ABIGAIL WAY. CONSTRUCT DRAINS INTO TEMPORARY BASINS. PAVE ABIGAIL WAY.
8) INSTALL RECHARGE BASINS AROUND BUILDINGS 4,5 & 6. PLUG INLETS TO RECHARGE BASINS UNTIL CONTRIBUTING AREAS ARE STABLE. STABILIZE AREAS AROUND BUILDINGS 4,5 &6.
9) PREPARE BUILDING PAD FOR BUILDING 1. CONSTRUCT BUILDING 1.
10) INSTALL RECHARGE, PLUG INLET TO RECHARGE BASIN UNTIL WATERSHED IS STABLE. COMPLETE FINAL GRADING AROUND BUILDING AND STABILIZE.

COMMONWEALTH OF MASSACHUSETTS
PAUL A. MARCHIONDA
CIVIL
No. 30015
PROFESSIONAL ENGINEER

3-14-11

REGISTRY USE ONLY

APPROVED BY THE
TOWN OF READING
PLANNING BOARD

DATE

DRW:	DSG:	CHK:		
4	ENGINEERING COMMENTS		3/14/11	
3	CON. COM. REVISIONS		3/9/11	
2	CPDC COMMENTS		2/15/11	
1	CON. COM. REVISIONS		2/8/11	
NO.	DESCRIPTION		DATE	

SEQUENCE 5

READING WOODS
in
READING, MA

Prepared For
PULTE HOMES OF NEW ENGLAND, L.L.C.
115 FLANDERS ROAD
WESTBORO, MA 01581

Marchionda
& Associates, L.P.
Engineering and Planning Consultants
62 Montvale Avenue
Suite I
Stoneham, MA 02180
TEL: (781) 438-6121
FAX: (781) 438-9654
Email: engineering@marchionda.com
Website: www.marchionda.com

DATE: 1/4/11

H:\PROJECTS\487-187\PB PLAN SET 3-14-2011\SEQUENCES.DWG

M. & A. NO.: 487-187 | SCALE: NOT TO SCALE

SHEET 30 OF 34

© 2011 MARCHIONDA AND ASSOCIATES, L.P.

1) CONSTRUCT RAIN GARDEN#5 & REMAINDER OF VILLAGE GREEN. CONSTRUCT RAIN GARDEN IN FRONT OF BUILDING 1. REMOVE PLUG & TEMPORARY PIPE TO SEDIMENT BASIN 4.
2) BEGIN CONSTRUCTION OF BUILDING 2.
3) CONSTRUCT RAIN GARDEN #2.
4) FINISH BUILDING 2. CONSTRUCT RAIN GARDEN #3 & THE REMAINDER OF THE OPEN SPACE PLANTINGS AND THE RAIN GARDEN IN FRONT OF BUILDING 2.

REGISTRY USE ONLY

APPROVED BY THE TOWN OF READING PLANNING BOARD

_____ DATE

DRW:	DSG:	CHK:

REV.	DESCRIPTION	DATE
4	ENGINEERING COMMENTS	3/14/11
3	CON. COM. REVISIONS	3/9/11
2	CPDC COMMENTS	2/15/11
1	CON. COM. REVISIONS	2/8/11

SEQUENCE 6

READING WOODS
in
READING, MA

Prepared For

PULTE HOMES OF NEW ENGLAND, L.L.C.
115 FLANDERS ROAD
WESTBORO, MA 01581

Marchionda & Associates, L.P.
Engineering and Planning Consultants
62 Montvale Avenue
Suite I
Stoneham, MA 02180
TEL: (781) 438-6121
FAX: (781) 438-9654
Email: engineering@marchionda.com
Website: www.marchionda.com

COMMONWEALTH OF MASSACHUSETTS
PAUL A. MARCHIONDA
CIVIL
No. 30015
REGISTERED PROFESSIONAL ENGINEER
3-14-11

DATE: 1/4/11

H:\PROJECTS\487-187\98 PLAN SET 3-14-2011\SEQUENCE6.DWG

M. & A. NO.: 487-187 | SCALE: NOT TO SCALE

SHEET 31 OF 34

© 2011 MARCHIONDA AND ASSOCIATES, L.P.

1)REMOVE SEDIMENT BASIN #5. REMOVE PLUG IN DRAIN FROM DMH#35.
2) BEGIN BUILDING 3 FOUNDATION.
3) INSTALL ROOF DRAIN AND FINISH GRADES AROUND BUILDING. STABILIZE.
4) ONCE STABILIZED REMOVE PLUG TO RECHARGE BASIN 2.
5) CONDUCT AS-BUILTS AND APPLY FOR COMPLIANCE CERTIFICATE.

REGISTRY USE ONLY

APPROVED BY THE TOWN OF READING PLANNING BOARD

DATE

REV	DESCRIPTION	DATE
4.	ENGINEERING COMMENTS	3/14/11
3.	CON. COM. REVISIONS	3/9/11
2.	CPDC COMMENTS	2/15/11
1.	CON. COM. REVISIONS	2/8/11

DRW: DSG: CHK:

SEQUENCE 7

READING WOODS
in
READING, MA

Prepared For

PULTE HOMES OF NEW ENGLAND, L.L.C.
115 FLANDERS ROAD
WESTBORO, MA 01581

Marchionda & Associates, L.P.
Engineering and Planning Consultants
62 Montvale Avenue
Suite I
Stoneham, MA 02180
TEL: (781) 438-6121
FAX: (781) 438-9654
Email: engineering@marchionda.com
Website: www.marchionda.com

PAUL A. MARCHIONDA CIVIL No. 29415 REGISTERED PROFESSIONAL ENGINEER COMMONWEALTH OF MASSACHUSETTS

DATE: 1/4/11

H:\PROJECTS\487-187\PB PLAN SET 3-14-2011\SEQUENCE7.DWG

M. & A. NO.: 487-187 | SCALE: NOT TO SCALE

SHEET 32 OF 34

© 2011 MARCHIONDA AND ASSOCIATES, L.P.

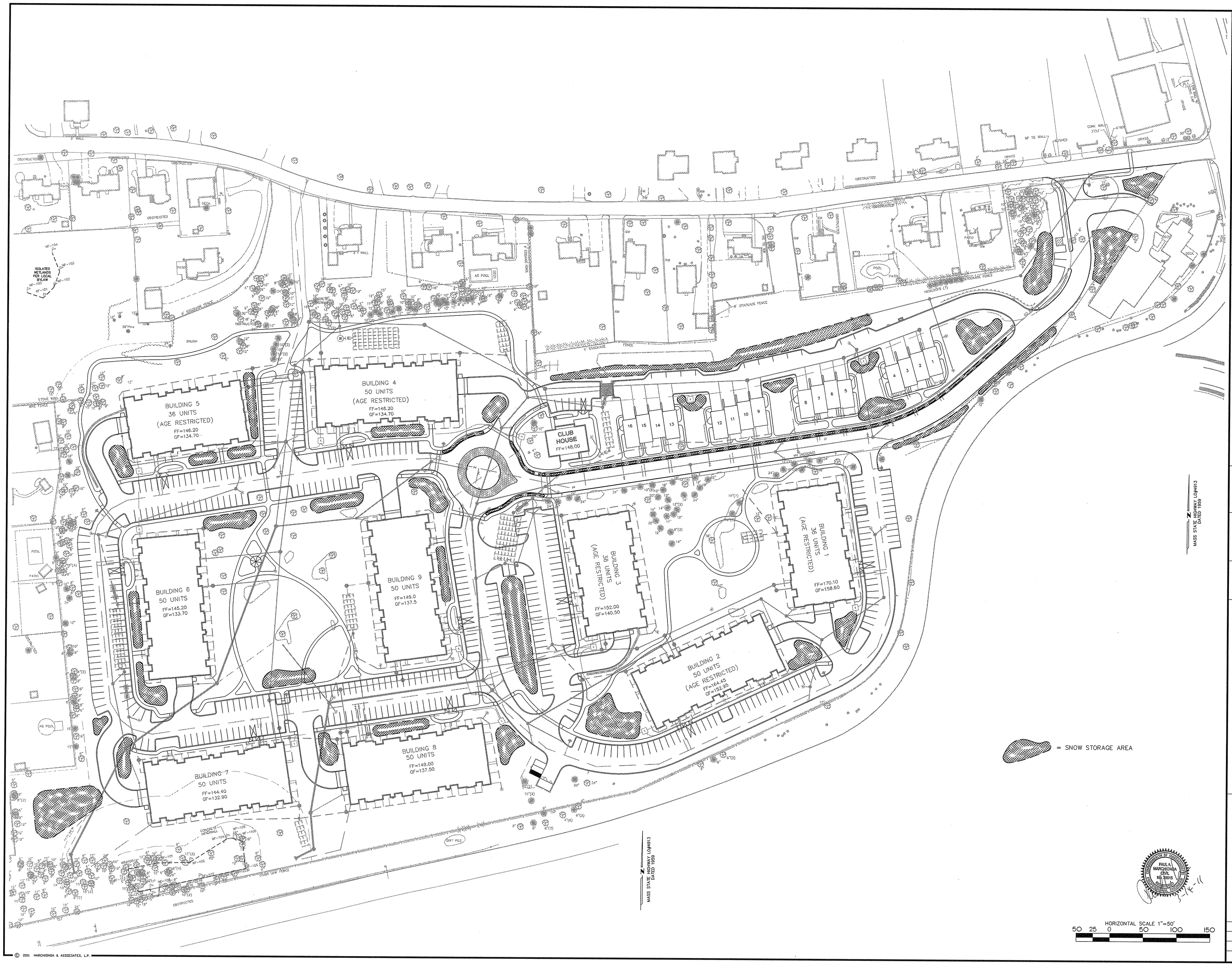

REGISTRY USE ONLY

APPROVED BY THE TOWN OF READING PLANNING BOARD

DATE

DRW:	DSG:	CHK:

REV.	DESCRIPTION	DATE
4	ENGINEERING COMMENTS	3/14/11
3	CON. COM. REVISIONS	3/9/11
2	CPDC COMMENTS	2/15/11
1	CON. COM. REVISIONS	2/8/11

SNOW STORAGE PLAN

READING WOODS
in
READING, MA

Prepared For

PULTE HOMES OF NEW ENGLAND, L.L.C.
115 FLANDERS ROAD
WESTBORO, MA 01581

Marchionda & Associates, L.P.
Engineering and Planning Consultants
62 Montvale Avenue
Suite I
Stoneham, MA 02180
TEL: (781) 438-6121
FAX: (781) 438-9654
Email: engineering@marchionda.com
Website: www.marchionda.com

PAUL A. MARCHIONDA CIVIL No. 30015 COMMONWEALTH OF MASSACHUSETTS

3-14-11

DATE: 1/4/11

H:\PROJECTS\487-187\PB PLAN SET 3-14-2011\SNOW STORAGE.DWG

M. & A. NO.: 487-187 | SCALE: 1"=50'

SHEET 33 OF 34

© 2011 MARCHIONDA & ASSOCIATES, L.P.

REGISTRY USE ONLY

APPROVED BY THE TOWN OF READING PLANNING BOARD

DATE

REV.	DESCRIPTION	DATE
4	ENGINEERING COMMENTS	3/14/11
3	CON. COM. REVISIONS	3/9/11
2	CPDC COMMENTS	2/15/11
1	CON. COM. REVISIONS	2/8/11

DRW: DSG: CHK:

SOIL TESTING PLAN

READING WOODS

in

READING, MA

Prepared For

PULTE HOMES OF NEW ENGLAND, L.L.C.

115 FLANDERS ROAD
WESTBORO, MA 01581

Marchionda & Associates, L.P.

Engineering and Planning Consultants

62 Montvale Avenue
Suite I
Stoneham, MA 02180
TEL: (781) 438-6121
FAX: (781) 438-9654
Email: engineering@marchionda.com
Website: www.marchionda.com

DATE: 1/4/11

H:\PROJECTS\487-187\PB PLAN SET 3-14-2011\SOIL TESTING PLAN.DWG

M. & A. NO.: 487-187 | SCALE: 1" = 40'

SHEET 34 OF 34

© 2011 MARCHIONDA & ASSOCIATES, L.P.

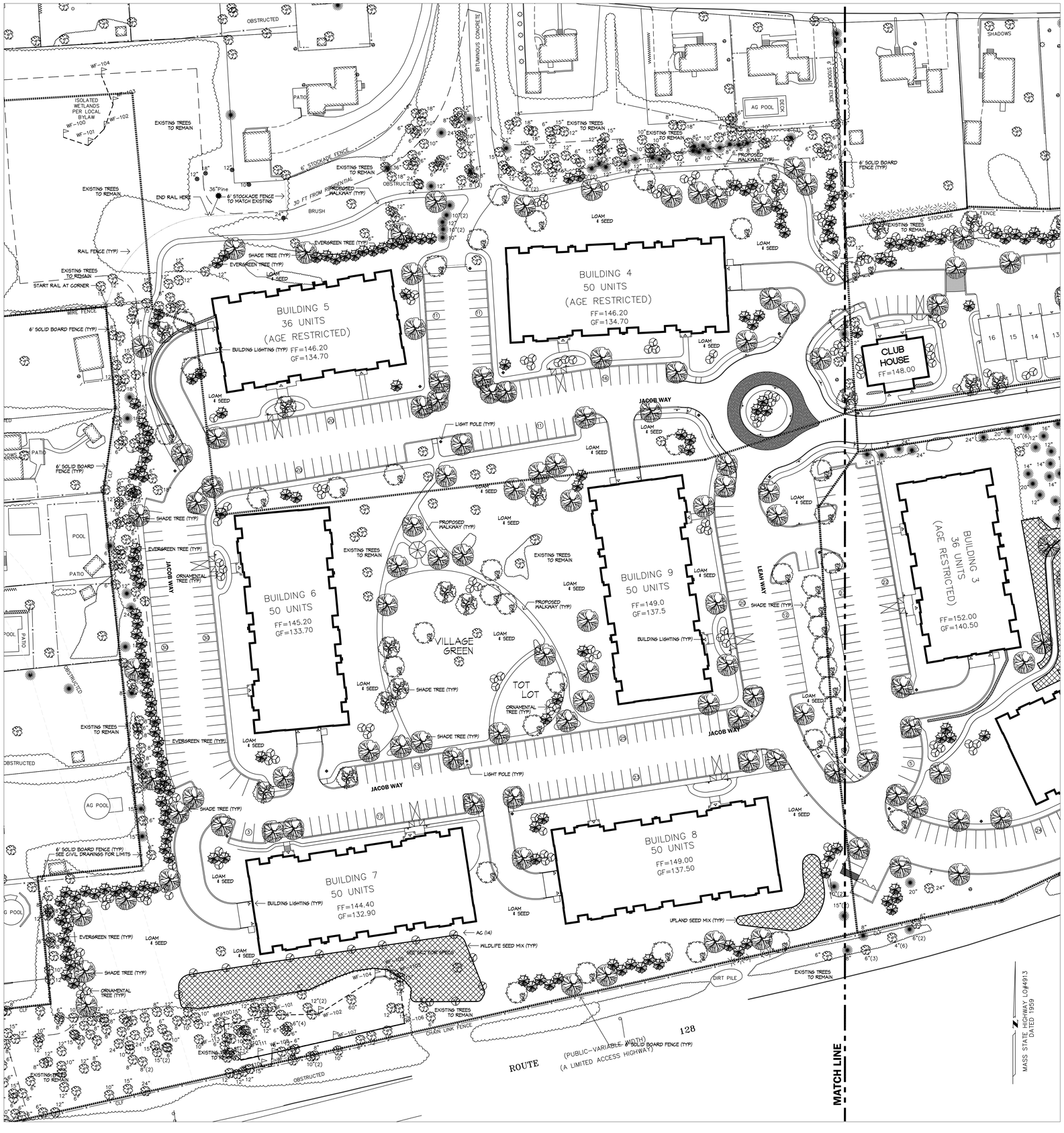

STREETSCAPE & BUFFER PLANT LIST

SYMBOL	QTY	ROOTS	SIZE	PLANT NAME
STREET TREE TYPE 'A'	15	B&B	3" CAL. MIN.	LINDEN VARIETIES (AMERICAN, REDMOND, GREENSPIRE, LITTLELEAF)
				CALLERY PEAR, HONEY LOCUST, ZELKOVA GREEN VASE, EUROPEAN BEACH
STREET TREE TYPE 'B'	48	B&B	3" CAL. MIN.	ASH VARIETIES (AUTUMN PURPLE, EMPIRE, SKYLINE, GREEN, SUMMIT)
				OAK VARIETIES (RED OAK, PIN OAK, WHITE OAK, BLACK OAK)
STREET TREE TYPE 'C'	40	B&B	3" CAL. MIN.	MAPLE VARIETIES (ARMSTRONG, AUTUMN BLAZE, RED SUNSET, RED MAPLE, SUGAR MAPLE)
ORNAMENTAL TREES	40	B&B	8' - 10' HT.	BIRCH VARIETIES (RIVER, HIMALAYAN, HERITAGE), CHERRY VARIETIES (SARGENT,
				SAND, ACCOLADE, KOREAN, AUTUMN FLOWERING, CANADY SELECT RED), CRAB APPLE
				VARIETIES (JAP. FLOWERING, PINK SPIRE, RED JADE, SARGENT, RED SPLENDOR, ZUMI,
				SUGAR TYME), EASTERN REDBUD, THORNLESS HAWTHORN, TOBA HAWTHORN, KOUSA
				DOGWOOD, JAPANESE TREE LILAC, MAPLE VARIETIES (NEDGE, AMUR, RED, JAP. TATARIEN)
				OAK VARIETIES (WHITE, SCARLET, BURR, ENGLISH, RED), PYRUS VARIETIES (ARISTOCRAT,
				CLEVELAND, SELECT, REDSPIRE), SERVICEBERRY ALLEGHANY, SERVICEBERRY
				SHADBLOW.
EVERGREEN TREES	135	B&B	7' - 8' HEIGHT	DOUGLASS FIR, WHITE FIR, SPRUCE VARIETIES (NORWAY, WHITE, SIBERIAN, COLORADO
				BLUE), PINE VARIETIES (AUSTRIAN, PONDEROSA, RED, EASTERN WHITE, SCOTCH),
				EASTERN RED CEDAR.
EXISTING EVERGREENS TREES				EXISTING EVERGREEN TREES TO REMAIN, SIZE VARIES. SEE CIVIL PLANS FOR DETAILS.
EXISTING DECIDUOUS TREES				EXISTING DECIDUOUS TREES TO REMAIN, SIZE VARIES. SEE CIVIL PLANS FOR DETAILS.

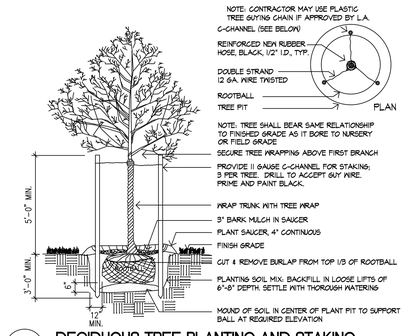

1 DECIDUOUS TREE PLANTING AND STAKING

SCALE: N.T.S. PL-TREDP

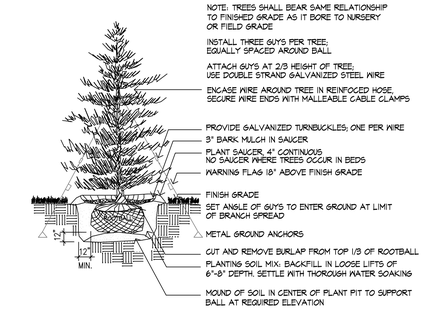

2 EVERGREEN TREE PLANTING

SCALE: N.T.S. PL-TREV

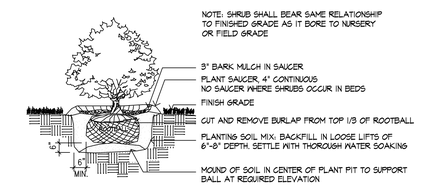

3 TYPICAL SHRUB PLANTING

SCALE: N.T.S. PL-SHR

REGISTRY USE ONLY

APPROVED BY THE TOWN OF READING PLANNING BOARD

DATE

Huntress Associates, Inc.
Landscape Architecture & Land Planning
17 Tewksbury Street
Andover, Massachusetts 01810
978 470 8882 FAX 978 470 8890

DRW:	DSG:	CHK:		DATE
			1. CPDC COMMENTS	2.15.11
			REV. DESCRIPTION	DATE

LANDSCAPE PLAN

READING WOODS
in
READING, MA

Prepared For

PULTE HOMES OF NEW ENGLAND, L.L.C.
115 FLANDERS ROAD
WESTBORO, MA 01581

Marchionda & Associates, L.P.
Engineering and Planning Consultants
62 Montvale Avenue
Suite 1
Stoneham, MA 02180
TEL: (781) 438-6121
FAX: (781) 438-9654
Email: engineering@marchionda.com
Website: www.marchionda.com

DATE: 1/4/11

H:\PROJECTS\487-187\PLAN SET 1-2011\LEGEND AND NOTES.DWG

M. & A. NO.: 487-187 | SCALE: 1" = 40'

SHEET L-1 OF 8

© 2011 MARCHIONDA & ASSOCIATES, L.P.

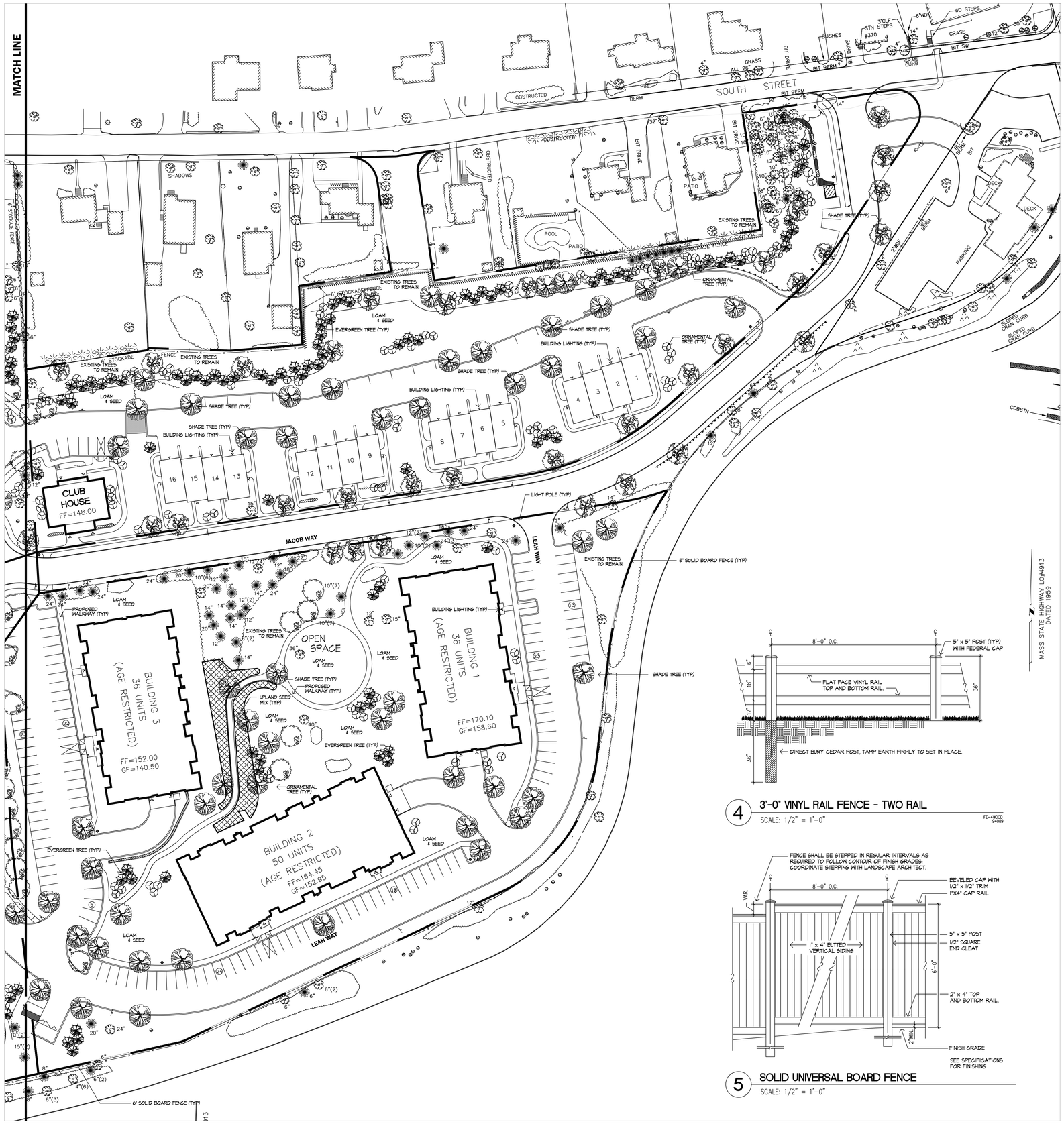

STREETSCAPE & BUFFER PLANT LIST

SYMBOL	QTY	ROOTS	SIZE	PLANT NAME
STREET TREE TYPE 'A'	34	B+B	3" CAL. MIN.	LINDEN VARIETIES (AMERICAN, REDMOND, GREENSPIRE, LITTLELEAF)
				GALLERY PEAR, HONEY LOCUST, ZELKOVA GREEN VASE, EUROPEAN BEACH
STREET TREE TYPE 'B'	11	B+B	3" CAL. MIN.	ASH VARIETIES (AUTUMN PURPLE, EMPIRE, SKYLINE, GREEN, SUMMIT)
				OAK VARIETIES (RED OAK, PIN OAK, WHITE OAK, BLACK OAK)
STREET TREE TYPE 'C'	49	B+B	3" CAL. MIN.	MAPLE VARIETIES (ARMSTRONG, AUTUMN BLAZE, RED SUNSET, RED MAPLE, SUGAR MAPLE)
ORNAMENTAL TREES	96	B+B	8' - 10' HT.	BIRCH VARIETIES (RIVER, HIMALAYAN, HERITAGE), CHERRY VARIETIES (SARGENT,
				SAND, ACCOLADE, KOREAN, AUTUMN FLOWERING, CANACY SELECT RED), CRAB APPLE
				VARIETIES (JAP. FLOWERING, PINK SPIRE, RED JADE, SARGENT, RED SPLENDOR, ZUMI,
				SUGAR TYME), EASTERN REDBUD, THORNLESS HAWTHORN, TOBA HAWTHORN, KOUSA
				DOGWOOD, JAPANESE TREE LILAC, MAPLE VARIETIES (HEDGE, AMUR, RED, JAP. TATARIEN)
				OAK VARIETIES (WHITE, SCARLET, BURR, ENGLISH, RED), PYRUS VARIETIES (ARISTOCRAT,
				CLEVELAND, SELECT, REDSPIRE), SERVICEBERRY ALLEGHANY, SERVICEBERRY
				SHADBLOW.
EVERGREEN TREES	80	B+B	7' - 8' HEIGHT	DOUGLASS FIR, WHITE FIR, SPRUCE VARIETIES (NORWAY, WHITE, SIBERIAN, COLORADO
				BLUE), PINE VARIETIES (AUSTRIAN, PONDEROSA, RED, EASTERN WHITE, SCOTCH),
				EASTERN RED CEDAR.
EXISTING EVERGREENS TREES				EXISTING EVERGREEN TREES TO REMAIN, SIZE VARIES. SEE CIVIL PLANS FOR DETAILS.
EXISTING DECIDUOUS TREES				EXISTING DECIDUOUS TREES TO REMAIN, SIZE VARIES. SEE CIVIL PLANS FOR DETAILS.

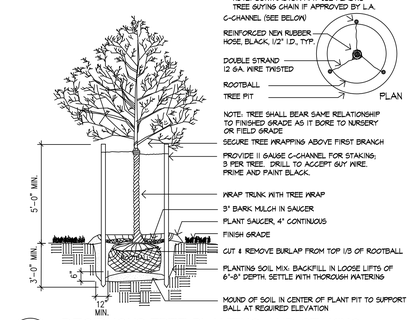

1 DECIDUOUS TREE PLANTING AND STAKING

SCALE: N.T.S. PL-TREDP

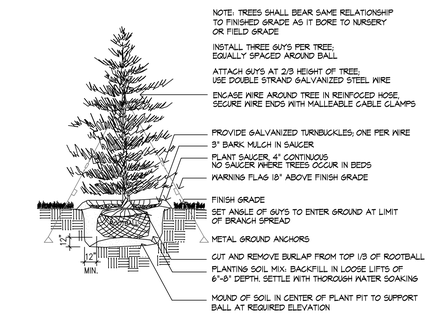

2 EVERGREEN TREE PLANTING

SCALE: N.T.S. PL-TREEV

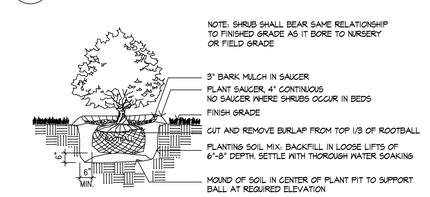

3 TYPICAL SHRUB PLANTING

SCALE: N.T.S. PL-SHR

4 3'-0" VINYL RAIL FENCE - TWO RAIL

SCALE: 1/2" = 1'-0" FE-49000 94089

5 SOLID UNIVERSAL BOARD FENCE

SCALE: 1/2" = 1'-0"

REGISTRY USE ONLY

APPROVED BY THE TOWN OF READING PLANNING BOARD

DATE

Huntress Associates, Inc.

Landscape Architecture & Land Planning

17 Tewksbury Street
Andover, Massachusetts 01810
978 470 8882 FAX 978 470 8890

DRW:	DSG:	CHK:		

2 TYPICAL BUILDING PLANTING PLAN (36 UNIT BUILDING)

SCALE: 1" = 20'

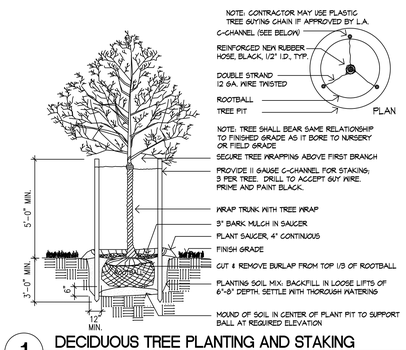

1 DECIDUOUS TREE PLANTING AND STAKING

SCALE: N.T.S.

PL-TREEP

PLANTING NOTES

1. PRIOR TO THE START OF ANY EXCAVATION FOR THE PROJECT BOTH ON AND OF THE SITE, THE CONTRACTOR SHALL NOTIFY DIGSAFE AND BE PROVIDED WITH A DIGSAFE NUMBER INDICATING THAT ALL EXISTING UTILITIES HAVE BEEN LOCATED AND MARKED.
2. CONTRACTOR SHALL BEGIN MAINTENANCE IMMEDIATELY AFTER PLANTING AND WILL CONTINUE UNTIL FINAL ACCEPTANCE.
3. CONTRACTOR SHALL VERIFY ALL TREE REMOVALS WITH LANDSCAPE ARCHITECT PRIOR TO CONSTRUCTION START.
4. CONTRACTOR SHALL MAINTAIN POSITIVE DRAINAGE AWAY FROM ALL BUILDINGS
5. THE LANDSCAPE CONTRACTOR SHALL SUPPLY ALL PLANT MATERIALS IN QUANTITIES SUFFICIENT TO COMPLETE ALL PLANTINGS SHOWN ON THIS DRAWING.
6. ALL MATERIALS SHALL CONFORM TO THE GUIDELINES ESTABLISHED BY THE AMERICAN ASSOCIATION OF NURSERYMEN.
7. ALL PLANTS SHALL BEAR THE SAME RELATIONSHIP TO FINISH GRADE AS TO ORIGINAL GRADES BEFORE DIGGING.
8. ALL PLANTS TO BE BALLED IN BURLAP OR CONTAINERIZED.
9. THE LANDSCAPE CONTRACTOR SHALL GUARANTEE ALL PLANT MATERIALS FOR ONE (1) FULL YEAR FROM DATE OF ACCEPTANCE.
10. ALL PLANT MATERIALS ARE SUBJECT TO THE APPROVAL OF THE LANDSCAPE ARCHITECT, AT THE NURSERY, AND AT THE SITE.
11. LANDSCAPE ARCHITECT TO FLAG ALL TREES TO BE TRANSPLANTED PRIOR TO CONSTRUCTION START.
12. ALL AREAS OF THE SITE WHICH HAVE BEEN DISTURBED AND NOT OTHERWISE DEVELOPED SHALL BE LOAMED AND SEEDED.
13. SCREENED IMAGES SHOW EXISTING CONDITIONS. WHERE EXISTING CONDITIONS LIE UNDER OR ARE IMPINGED UPON BY PROPOSED BUILDINGS AND\OR SITE ELEMENTS, THE EXISTING CONDITION WILL BE REMOVED, ABANDONED AND\OR CAPPED OR DEMOLISHED AS REQUIRED.

EROSION CONTROL / WILDLIFE SEED MIXTURES

1. UPLAND SEED MIX

   GRASSES: CREEPING RED FESCUE (FESTUCA RUBRA), SWITCHGRASS (PANICUM VIRGATUM), DEERTONGUE (PNICUM GLANDESTINUM), LITTLE BLUESTEM (SCHIZACHYRIUM SCOPARIUS), INDIANGRASS (SORGHASTRUM NUTANS), BIG BLUESTEM (ANDROPOGON GERADII)
   WILDFLOWERS: PARTRIDGE PEA (CHAMAECRISTA FASCIGULATA), SHOWY TICK-TREFOIL (DESMODIUM CANADENSE), WILD BLUE LUPINE (LUPINUS PERENNIS), EARLY GOLDENROD (SOLIDAGO JUNCEA), BUTTERFLY MILKWEED (ASCLEPIAS TUBEROSA)
   SHRUBS: GRAY DOGWOOD (CORNUS RACEMOSA), STAGHORN SUMAC (RHUS TYPHINIA), SILKY DOGWOOD (CORNUS AMONUM)

   APPLICATION RATE: 35 LBS/ACRE 1245 SQ FT/LB

2. NEW ENGLAND WILDLIFE SEED MIX

   BIG BLUESTEM (ANDROPOGAN GERARDII), LITTLE BLUESTEM SCHIZACHYRIUM SCOPARIUS)
   SWITCHGRASS (PANICUM VIRGATUM), DEERTONGUE (PANICUM CLANDESTINUM), FOWL BLUEGRASS (POA PALUSTRIS), CANADA WILD-RYE (ELYMUS CANADENSIS), PENNSYLVANIA SMARTWEED (POLYGONUM PENSYLVANICUM), PARTRIDGE PEA (CHAMAECRISTA FASCIGULATA), ANNUAL SUNFLOWER (HELIANTHUS ANUUS), SHOWY TICK-TREFOIL (DESDMODIUM CANADENSE), COMMON MILKWEED (ASCLEPIAS SYRIACA), NEW YORK ASTER (ASTER NOVI-BELGII), NODDING BUR-MARIGOLD (BIDENS CERNUA)

   APPLICATION RATE: 25 LBS/ACRE 1148 SQ FT/LB

3. SYM QTY SIZE SPECIES
   (AC) 14 3-4' HT. AMELANCHIER CANDENSIS - SHADBLOW

4. COORDINATE LIMITS WITH GRADING PLAN AND CIVIL ENGINEER.

© 2011 MARCHIONDA & ASSOCIATES, L.P.

REGISTRY USE ONLY

APPROVED BY THE TOWN OF READING PLANNING BOARD

DATE

Huntress Associates, Inc.
Landscape Architecture & Land Planning
17 Tewksbury Street
Andover, Massachusetts 01810
978 470 8882 FAX 978 470 8890

DRW:	DSG:	CHK:		