NOTES:

1) THE PROPOSED SEWER IS INITIALLY TO BE CONSTRUCTED FROM PROP. SMH 16 IN FRONT OF TOWNHOUSE UNIT #1 TO PROP. SMH 4. A TEMPORARY SEWER CONNECTION IS TO BE INSTALLED FROM THE 8" STUB BETWEEN PROP. SMH 4 AND PROP. SMH 5 TO THE EXISTING SMH AT THE REAR LEFT CORNER OF PROPOSED BUILDING 4. THIS IS TO ALLOW THE TEMPORARY CONNECTION OF THE 16 TOWNHOUSE UNITS AND THE CLUBHOUSE TO THE EXISTING SEWER SYSTEM IN SOUTH STREET.
2) UPON COMPLETION OF THE SEWER FORCE MAIN, THE GRAVITY SEWER TO THE PUMP STATION AND THE PUMP STATION, THE TEMPORARY PIPE IS TO BE REMOVED.

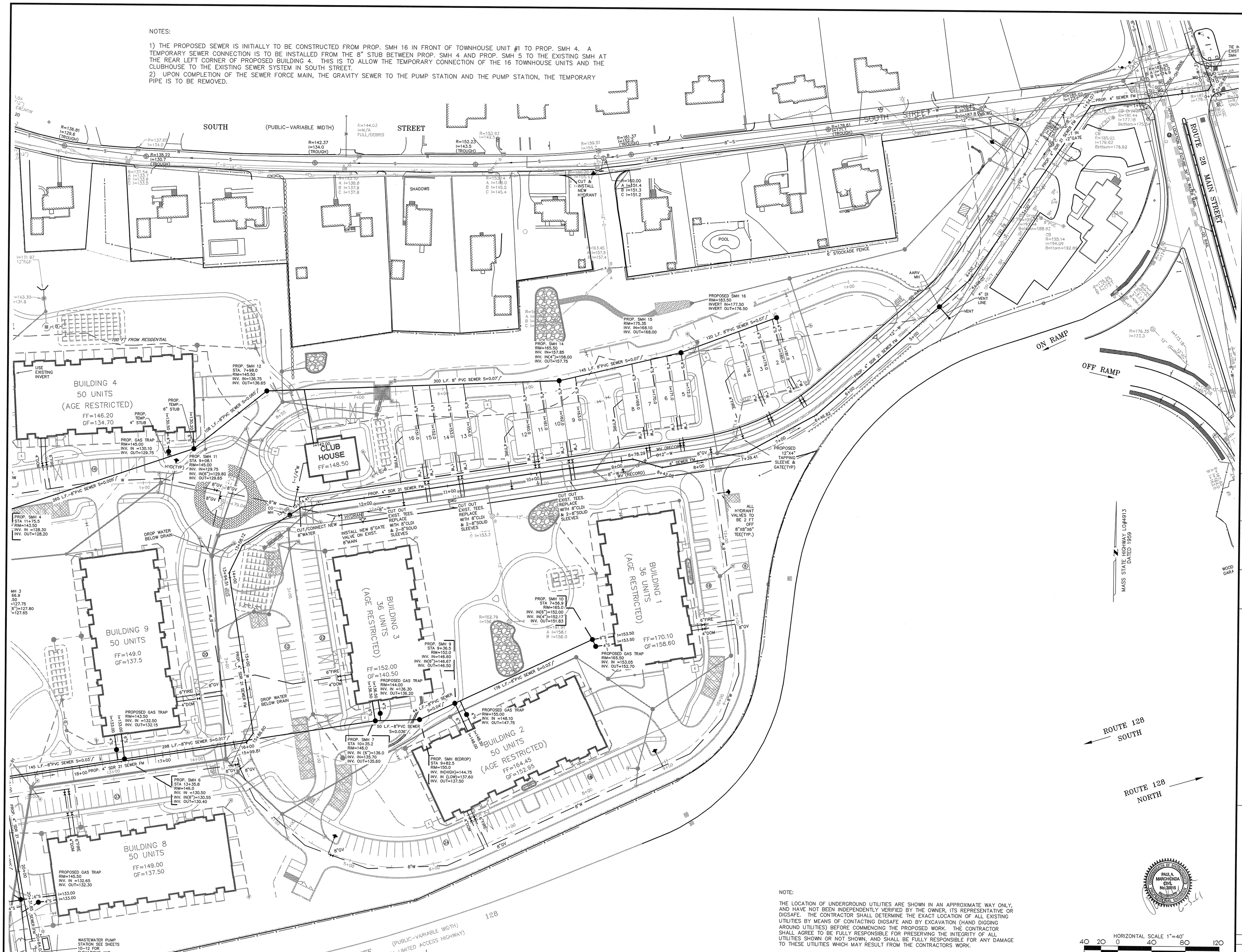

NOTE:

THE LOCATION OF UNDERGROUND UTILITIES ARE SHOWN IN AN APPROXIMATE WAY ONLY, AND HAVE NOT BEEN INDEPENDENTLY VERIFIED BY THE OWNER, ITS REPRESENTATIVE OR DIGSAFE. THE CONTRACTOR SHALL DETERMINE THE EXACT LOCATION OF ALL EXISTING UTILITIES BY MEANS OF CONTACTING DIGSAFE AND BY EXCAVATION (HAND DIGGING AROUND UTILITIES) BEFORE COMMENCING THE PROPOSED WORK. THE CONTRACTOR SHALL AGREE TO BE FULLY RESPONSIBLE FOR PRESERVING THE INTEGRITY OF ALL UTILITIES SHOWN OR NOT SHOWN, AND SHALL BE FULLY RESPONSIBLE FOR ANY DAMAGE TO THESE UTILITIES WHICH MAY RESULT FROM THE CONTRACTORS WORK.

HORIZONTAL SCALE 1"=40'
40 20 0 40 80 120

REGISTRY USE ONLY

APPROVED BY THE TOWN OF READING PLANNING BOARD

DATE

REV.	DESCRIPTION	DATE
5	MISC. REVISIONS	6/3/11
4	ENGINEERING COMMENTS	3/14/11
3	CON. COM. REVISIONS	3/9/11
2	CPDC COMMENTS	2/15/11
1	CON. COM. REVISIONS	2/8/11

DRW: DSG: CHK:

SEWER + WATER PLAN

READING WOODS in READING, MA

Prepared For

PULTE HOMES OF NEW ENGLAND, L.L.C.
115 FLANDERS ROAD
WESTBORO, MA 01581

Marchionda & Associates, L.P.
Engineering and Planning Consultants
62 Montvale Avenue
Suite I
Stoneham, MA 02180
TEL: (781) 438-6121
FAX: (781) 438-9654
Email: engineering@marchionda.com
Website: www.marchionda.com

DATE: 1/4/11

H:\PROJECTS\487-187\PLANS\PB\6-3-2011\SEW-WTR.DWG

M. & A. NO.: 487-187 SCALE: 1"=40'

SHEET 13 OF 37

© 2011 MARCHIONDA & ASSOCIATES, L.P.

NOTES:

1) THE PROPOSED SEWER IS INITIALLY TO BE CONSTRUCTED FROM PROP. SMH 16 IN FRONT OF TOWNHOUSE UNIT #1 TO PROP. SMH 4. A TEMPORARY SEWER CONNECTION IS TO BE INSTALLED FROM THE 8" STUB BETWEEN PROP. SMH 4 AND PROP. SMH 5 TO THE EXISTING SMH AT THE REAR LEFT CORNER OF PROPOSED BUILDING 4. THIS IS TO ALLOW THE TEMPORARY CONNECTION OF THE 16 TOWNHOUSE UNITS AND THE CLUBHOUSE TO THE EXISTING SEWER SYSTEM IN SOUTH STREET.
2) UPON COMPLETION OF THE SEWER FORCE MAIN, THE GRAVITY SEWER TO THE PUMP STATION AND THE PUMP STATION, THE TEMPORARY PIPE IS TO BE REMOVED.

NOTE:

THE LOCATION OF UNDERGROUND UTILITIES ARE SHOWN IN AN APPROXIMATE WAY ONLY, AND HAVE NOT BEEN INDEPENDENTLY VERIFIED BY THE OWNER, ITS REPRESENTATIVE OR DIGSAFE. THE CONTRACTOR SHALL DETERMINE THE EXACT LOCATION OF ALL EXISTING UTILITIES BY MEANS OF CONTACTING DIGSAFE AND BY EXCAVATION (HAND DIGGING AROUND UTILITIES) BEFORE COMMENCING THE PROPOSED WORK. THE CONTRACTOR SHALL AGREE TO BE FULLY RESPONSIBLE FOR PRESERVING THE INTEGRITY OF ALL UTILITIES SHOWN OR NOT SHOWN, AND SHALL BE FULLY RESPONSIBLE FOR ANY DAMAGE TO THESE UTILITIES WHICH MAY RESULT FROM THE CONTRACTORS WORK.

HORIZONTAL SCALE 1"=40'
40 20 0 40 80 120

REGISTRY USE ONLY

APPROVED BY THE TOWN OF READING PLANNING BOARD

DATE

REV.	DESCRIPTION	DATE
5	MISC. REVISIONS	6/3/11
4	ENGINEERING COMMENTS	3/14/11
3	CON. COM. REVISIONS	3/9/11
2	CPDC COMMENTS	2/15/11
1	CON. COM. REVISIONS	2/8/11

DRW: DSG: CHK:

SEWER + WATER PLAN

READING WOODS

in

READING, MA

Prepared For

PULTE HOMES OF NEW ENGLAND, L.L.C.
115 FLANDERS ROAD
WESTBORO, MA 01581

Marchionda & Associates, L.P.
Engineering and Planning Consultants
62 Montvale Avenue
Suite I
Stoneham, MA 02180
TEL: (781) 438-6121
FAX: (781) 438-9654
Email: engineering@marchionda.com
Website: www.marchionda.com

DATE: 1/4/11

H:\PROJECTS\487-187\PLANS\PB\6-3-2011\SEW-WTR.DWG

M. & A. NO.: 487-187 SCALE: 1"=40'

SHEET 14 OF 37

© 2011 MARCHIONDA & ASSOCIATES, L.P.

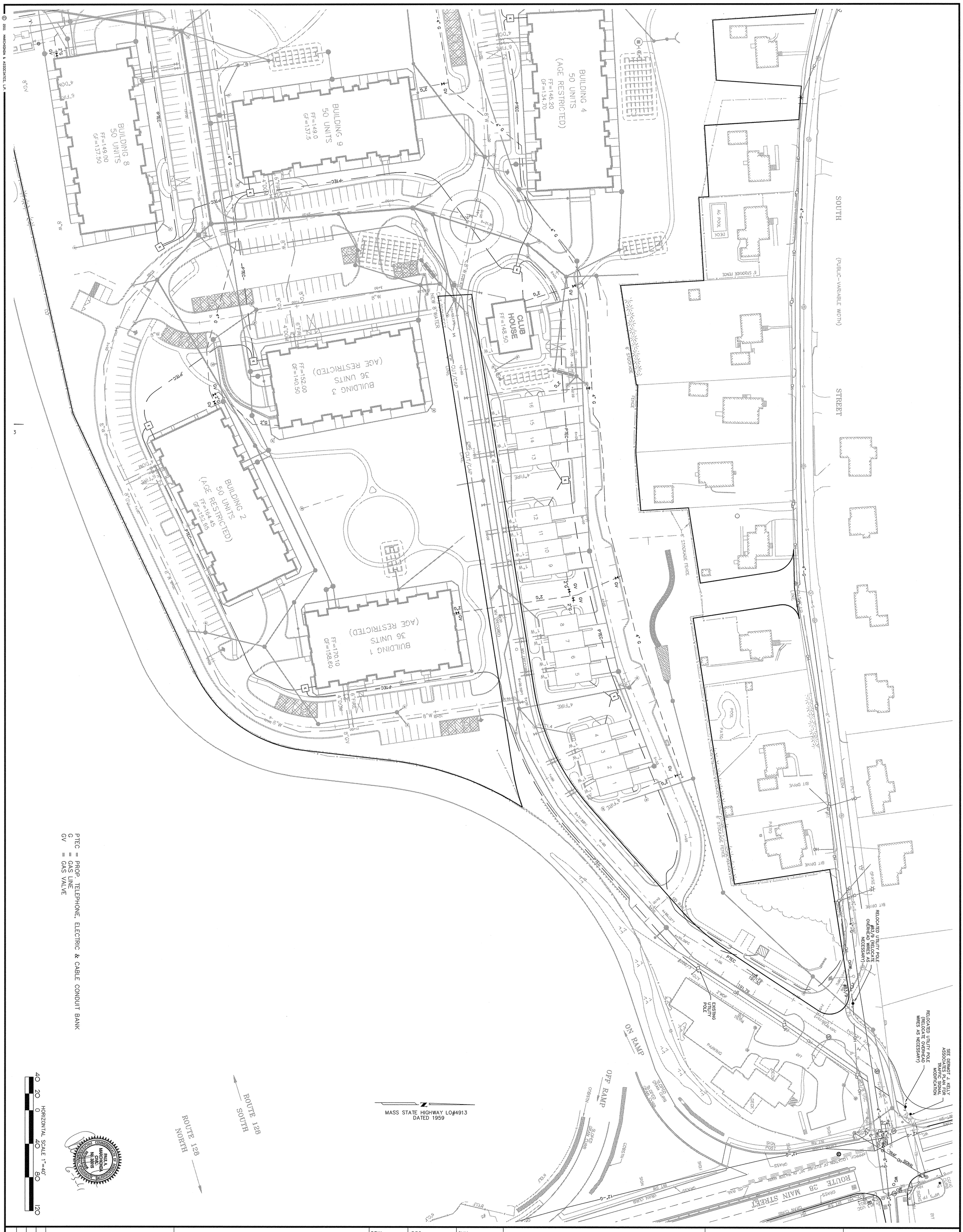

PTEC = PROP. TELEPHONE, ELECTRIC & CABLE CONDUIT BANK
G = GAS LINE
GV = GAS VALVE

© 2011 MARCHIONDA & ASSOCIATES, LP

Marchionda & Associates, L.P.
Engineering and Planning Consultants
62 Montvale Avenue
Suite 1
Stoneham, MA 02180
TEL: (781) 438-6121
FAX: (781) 438-9654
Email: engineering@marchionda.com
Website: www.marchionda.com

DATE: 1/4/11
H:\PROJECTS\487-187\PLANS\PB\6-3-2011\UTIL.DWG
M. & A. NO.: 487-187 | SCALE: 1"=40'

SHEET 15 OF 37

MISCELLANEOUS UTILITY PLAN

READING WOODS
in
READING, MA

Prepared For

PULTE HOMES OF NEW ENGLAND, L.L.C.
115 FLANDERS ROAD
WESTBORO, MA 01581

DRW: | DSG: | CHK:

REV.	DESCRIPTION	DATE
5.	MISC. REVISIONS	6/3/11
4.	ENGINEERING COMMENTS	3/14/11
3.	CON. COM. REVISIONS	3/9/11
2.	CPDC COMMENTS	2/15/11
1.	CON. COM. REVISIONS	2/8/11

APPROVED BY THE TOWN OF READING PLANNING BOARD

DATE

REGISTRY USE ONLY

© 2011 MARCHIONDA & ASSOCIATES, LP.

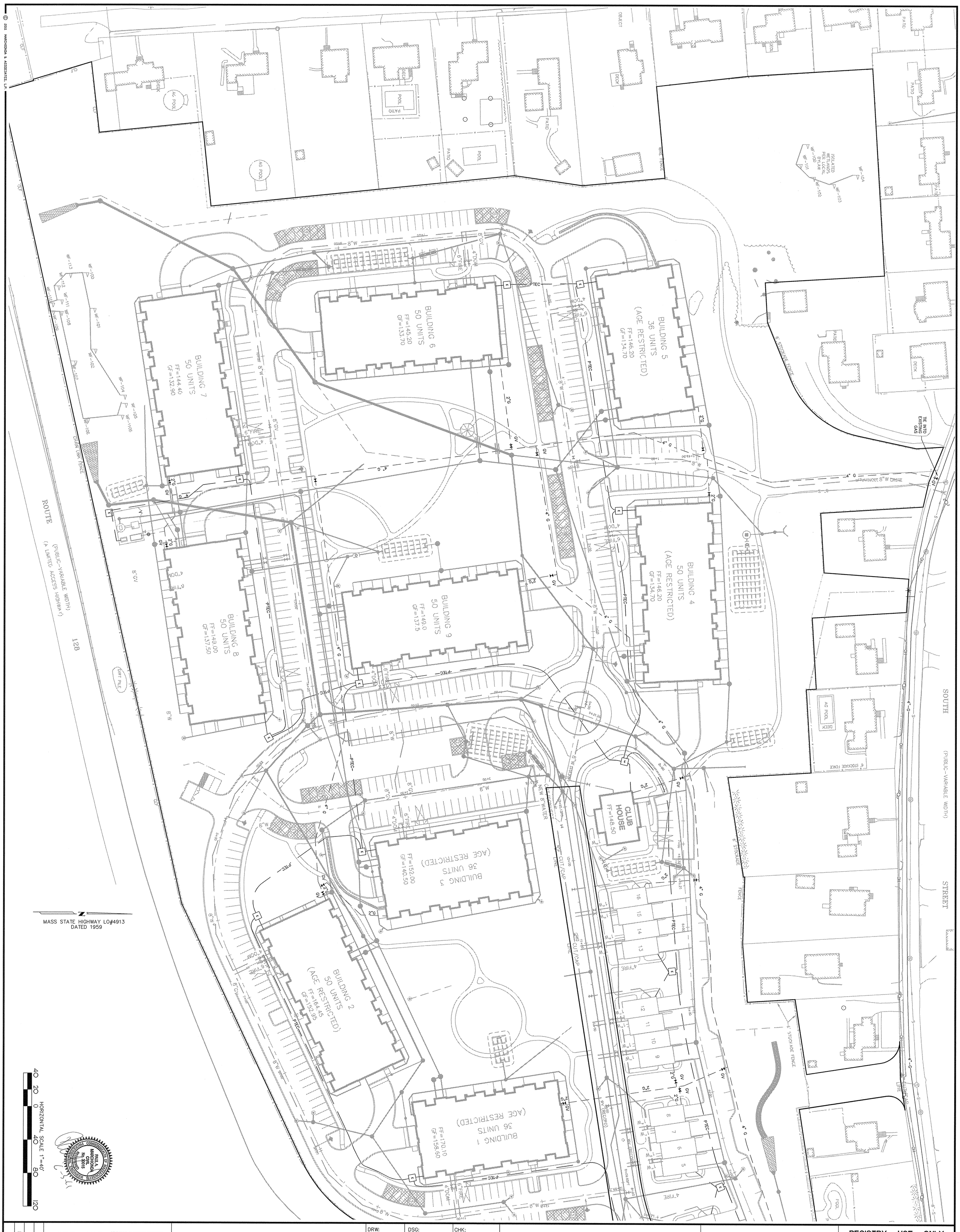

MISCELLANEOUS UTILITY PLAN

READING WOODS

in

READING, MA

Prepared For

PULTE HOMES OF NEW ENGLAND, L.L.C.

115 FLANDERS ROAD
WESTBORO, MA 01581

DRW:	DSG:	CHK:

REV.	DESCRIPTION	DATE
5.	MISC. REVISIONS	6/3/11
4.	ENGINEERING COMMENTS	3/14/11
3.	CON. COM. REVISIONS	3/9/11
2.	CPDC COMMENTS	2/15/11
1.	CON. COM. REVISIONS	2/8/11

APPROVED BY THE TOWN OF READING PLANNING BOARD

DATE

REGISTRY USE ONLY

Marchionda & Associates, L.P.
Engineering and Planning Consultants
62 Montvale Avenue
Suite 1
Stoneham, MA 02180
TEL: (781) 438-6121
FAX: (781) 438-9654
Email: engineering@marchionda.com
Website: www.marchionda.com

DATE: 1/4/11
H:\PROJECTS\487-187\PLANS\PB\6-3-2011\UTIL.DWG
M. & A. NO.: 487-187
SCALE: 1"=40'

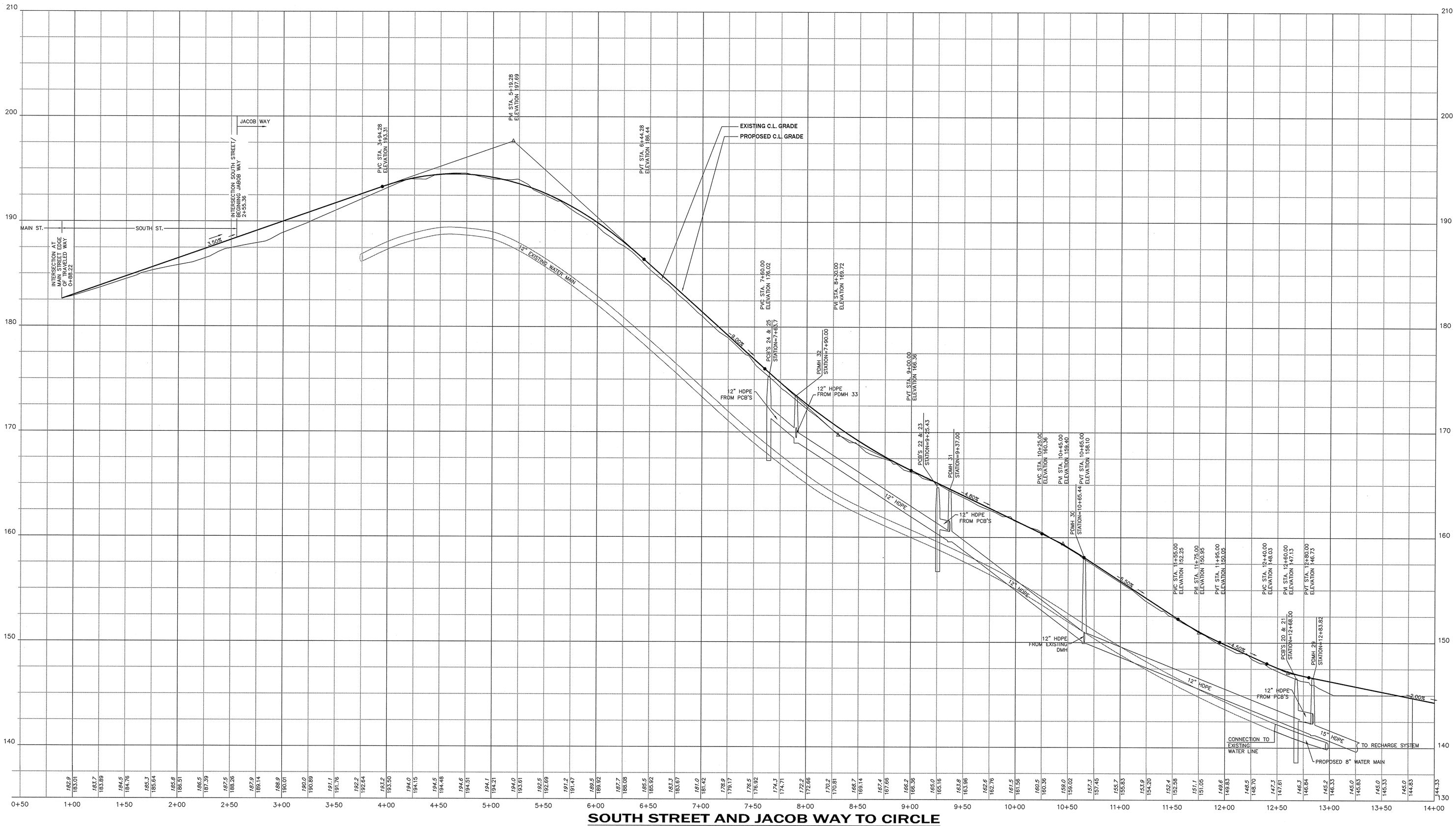

SOUTH STREET AND JACOB WAY TO CIRCLE

HORIZONTAL SCALE: 1" = 40'
VERTICAL SCALE: 1" = 4'

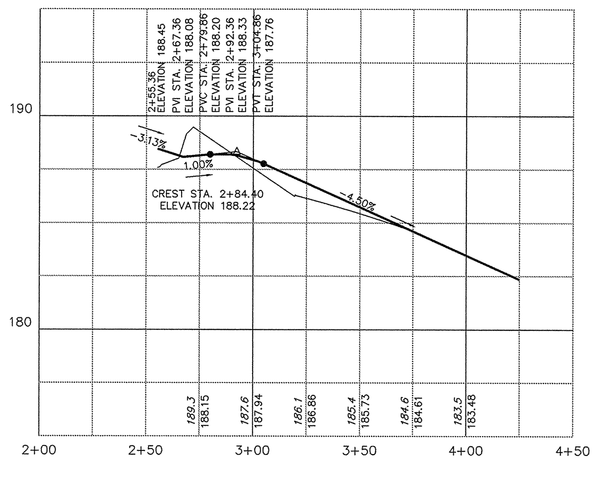

SOUTH STREET RELOCATION

HORIZONTAL SCALE: 1" = 40'
VERTICAL SCALE: 1" = 4'

HORIZONTAL SCALE 1"=40'
VERTICAL SCALE 1"=4'

REGISTRY USE ONLY

APPROVED BY THE TOWN OF READING PLANNING BOARD

DATE

DRW:	DSG:	CHK:

REV.	DESCRIPTION	DATE
5.	MISC. REVISIONS	6/6/11
4.	ENGINEERING COMMENTS	3/14/11
3.	CON. COM. REVISIONS	3/9/11
2.	CPDC COMMENTS	2/15/11
1.	CON. COM. REVISIONS	2/8/11

DRIVE WAY PROFILES
SOUTH STREET AND JACOB WAY TO CIRCLE

READING WOODS
in
READING, MA

Prepared For

PULTE HOMES OF NEW ENGLAND, L.L.C.
115 FLANDERS ROAD
WESTBORO, MA 01581

Marchionda & Associates, L.P.
Engineering and Planning Consultants
62 Montvale Avenue
Suite I
Stoneham, MA 02180
TEL: (781) 438-6121
FAX: (781) 438-9654
Email: engineering@marchionda.com
Website: www.marchionda.com

DATE: 1/4/11
H:\PROJECTS\487-187\PLANS\PB\6-3-2011\PROFILES.DWG
M. & A. NO.: 487-187 | SCALE: AS SHOWN

© 2011 MARCHIONDA & ASSOCIATES, L.P.

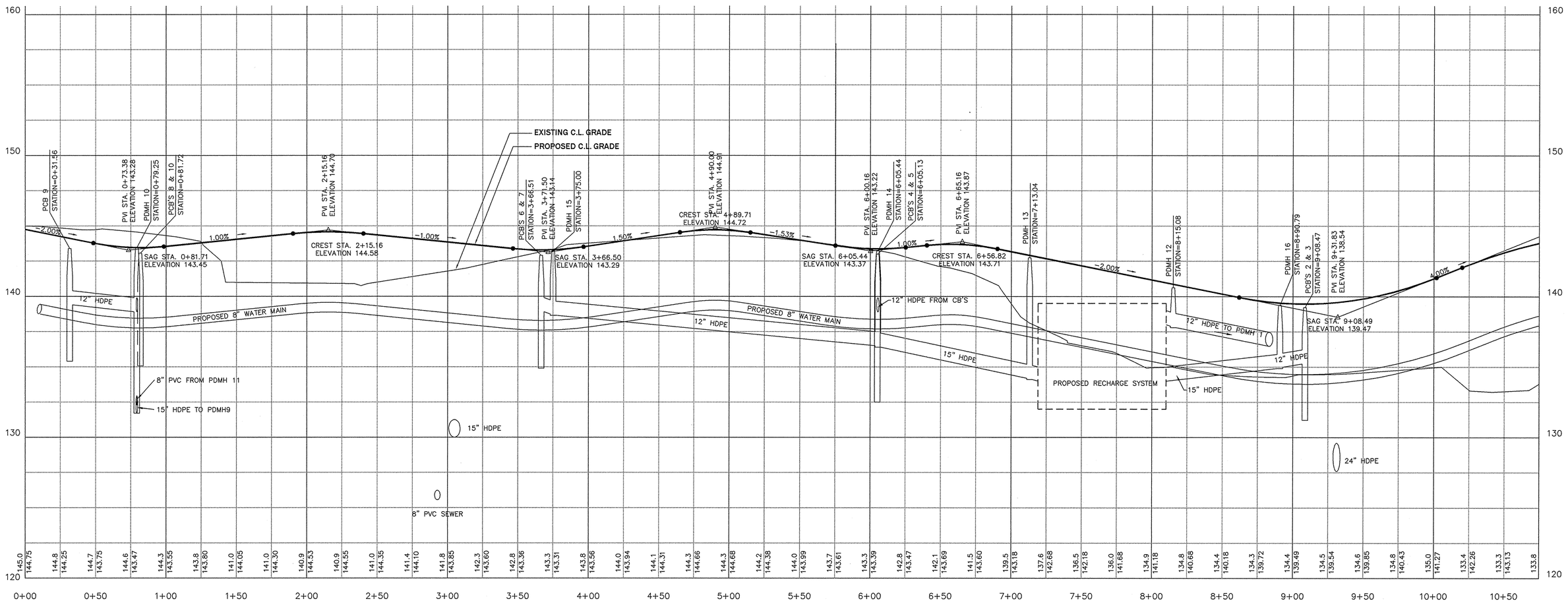

AUGUSTUS COURT 0+00 - 10+00

HORIZONTAL SCALE: 1" = 40'
VERTICAL SCALE: 1" = 4'

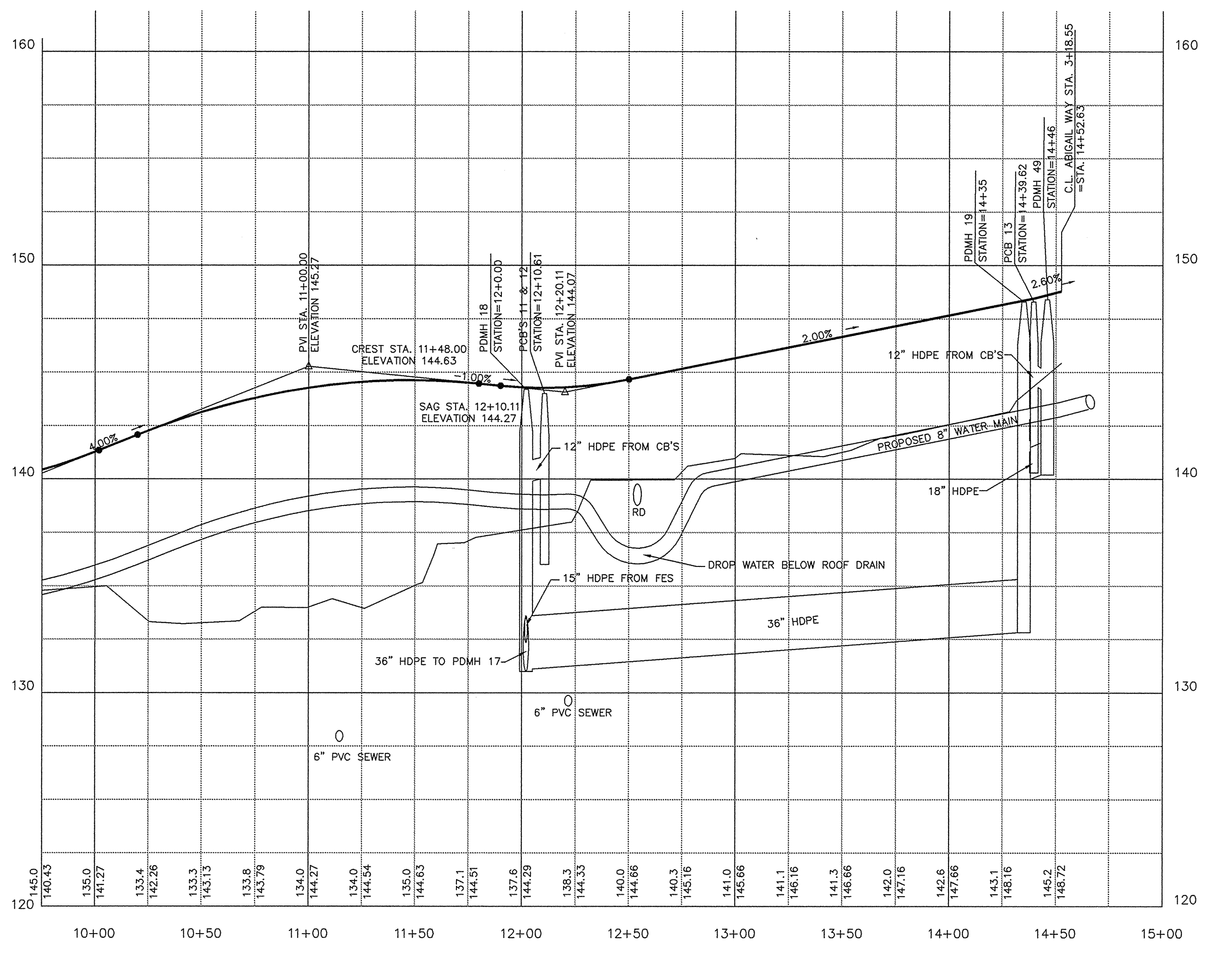

AUGUSTUS COURT 10+00 - END

HORIZONTAL SCALE: 1" = 40'
VERTICAL SCALE: 1" = 4'

HORIZONTAL SCALE 1"=40'
40 20 0 40 80 120
4 2 0 4 8 12
VERTICAL SCALE 1"=4'

REGISTRY USE ONLY

APPROVED BY THE TOWN OF READING PLANNING BOARD

DATE

DRW:	DSG:	CHK:

REV.	DESCRIPTION	DATE
5	MISC. REVISIONS	6/6/11
4	ENGINEERING COMMENTS	3/14/11
3	CON. COM. REVISIONS	3/9/11
2	CPDC COMMENTS	2/15/11
1	CON. COM. REVISIONS	2/8/11

DRIVE WAY PROFILES
AUGUSTUS COURT
CIRCLE TO ABIGAIL WAY

READING WOODS

in

READING, MA

Prepared For

PULTE HOMES OF NEW ENGLAND, L.L.C.
115 FLANDERS ROAD
WESTBORO, MA 01581

Marchionda & Associates, L.P.
Engineering and Planning Consultants

62 Montvale Avenue
Suite I
Stoneham, MA 02180
TEL: (781) 438-6121
FAX: (781) 438-9654
Email: engineering@marchionda.com
Website: www.marchionda.com

COMMONWEALTH OF MASSACHUSETTS
PAUL A. MARCHIONDA
CIVIL
No. 30015
REGISTERED PROFESSIONAL ENGINEER
6-3-11

DATE: 1/4/11

H:\PROJECTS\487-187\PLANS\P8\6-3-2011\PROFILES.DWG

M. & A. NO.: 487-187 | SCALE: AS SHOWN

SHEET 18 OF 37

© 2011 MARCHIONDA & ASSOCIATES, L.P.

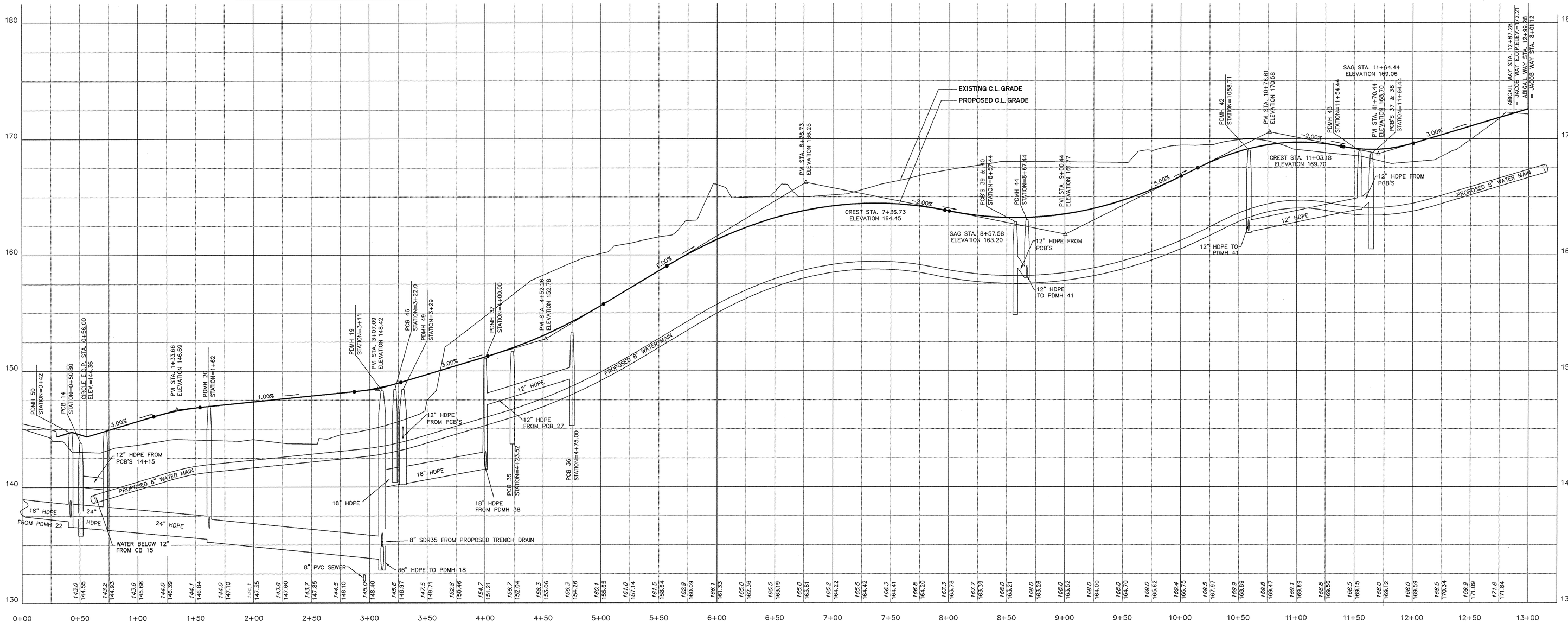

ABIGAIL WAY

HORIZONTAL SCALE: 1" = 40'
VERTICAL SCALE: 1" = 4'

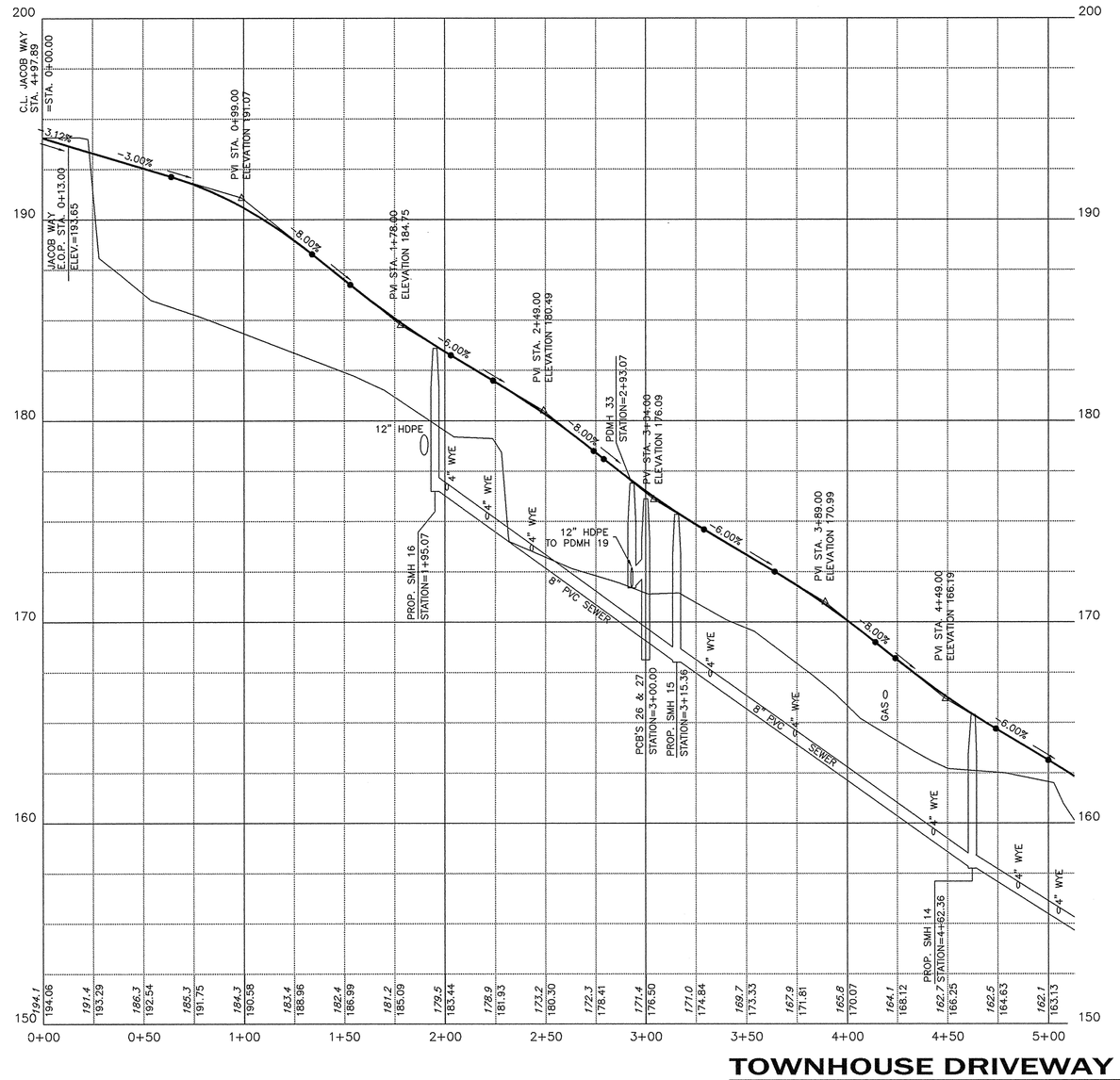

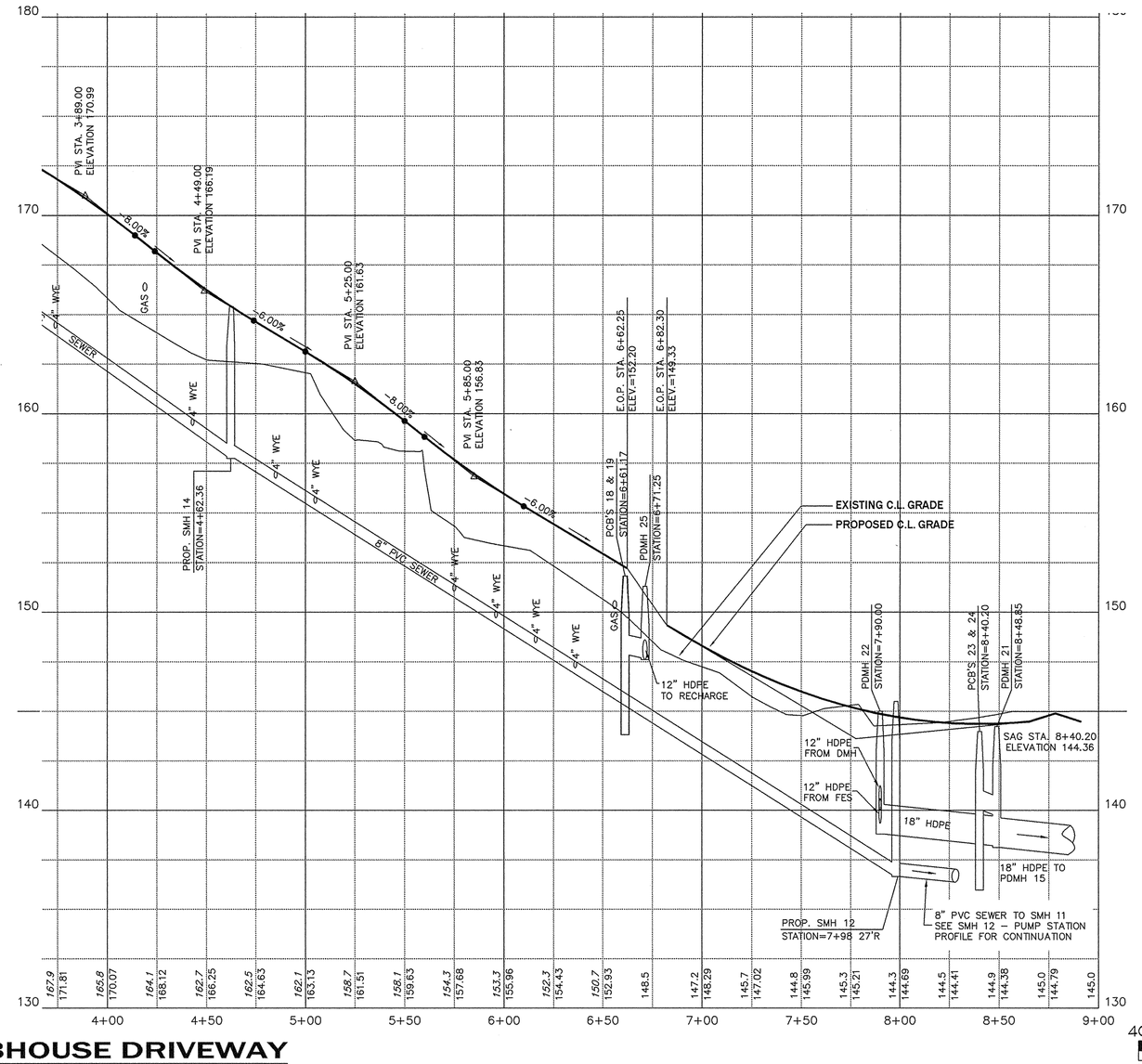

TOWNHOUSE DRIVEWAY + CLUBHOUSE DRIVEWAY

HORIZONTAL SCALE: 1" = 40'
VERTICAL SCALE: 1" = 4'

HORIZONTAL SCALE 1"=40'
VERTICAL SCALE 1"=4'

© 2011 MARCHIONDA & ASSOCIATES, L.P.

REGISTRY USE ONLY

APPROVED BY THE TOWN OF READING PLANNING BOARD

DATE

DRW:	DSG:	CHK:

REV.	DESCRIPTION	DATE
5	MISC. REVISIONS	6/6/11
4	ENGINEERING COMMENTS	3/14/11
3	CON. COM. REVISIONS	3/9/11
2	CPDC COMMENTS	2/15/11
1	CON. COM. REVISIONS	2/8/11

DRIVE WAY PROFILES
ABIGAIL WAY
TOWNHOUSE + CLUBHOUSE DRIVEWAY

READING WOODS
in
READING, MA

Prepared For

PULTE HOMES OF NEW ENGLAND, L.L.C.
115 FLANDERS ROAD
WESTBORO, MA 01581

Marchionda & Associates, L.P.
Engineering and Planning Consultants
62 Montvale Avenue
Suite I
Stoneham, MA 02180
TEL: (781) 438-6121
FAX: (781) 438-9654
Email: engineering@marchionda.com
Website: www.marchionda.com

PAUL A. MARCHIONDA CIVIL No. 30015 COMMONWEALTH OF MASSACHUSETTS

DATE: 1/4/11

H:\PROJECTS\487-187\PLANS\PB\6-3-2011\PROFILES.DWG

M. & A. NO.: 487-187 | SCALE: AS SHOWN

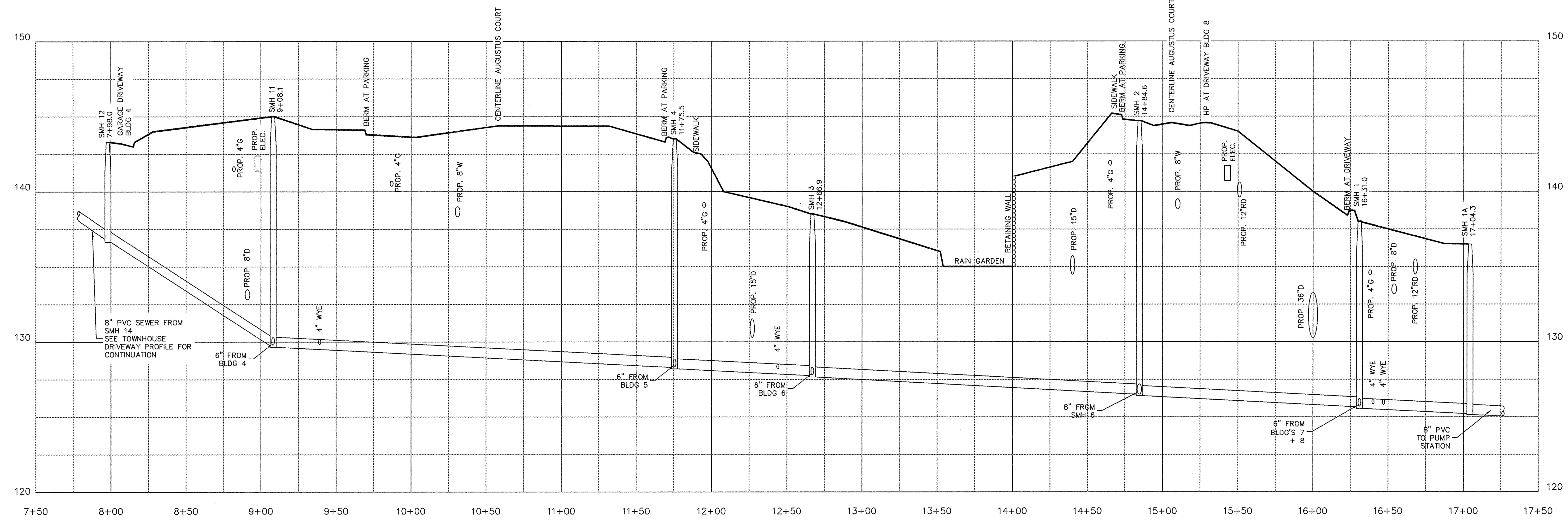

SEWER PROFILE SMH 1 TO SMH 12

HORIZONTAL SCALE: 1" = 40'
VERTICAL SCALE: 1" = 4'

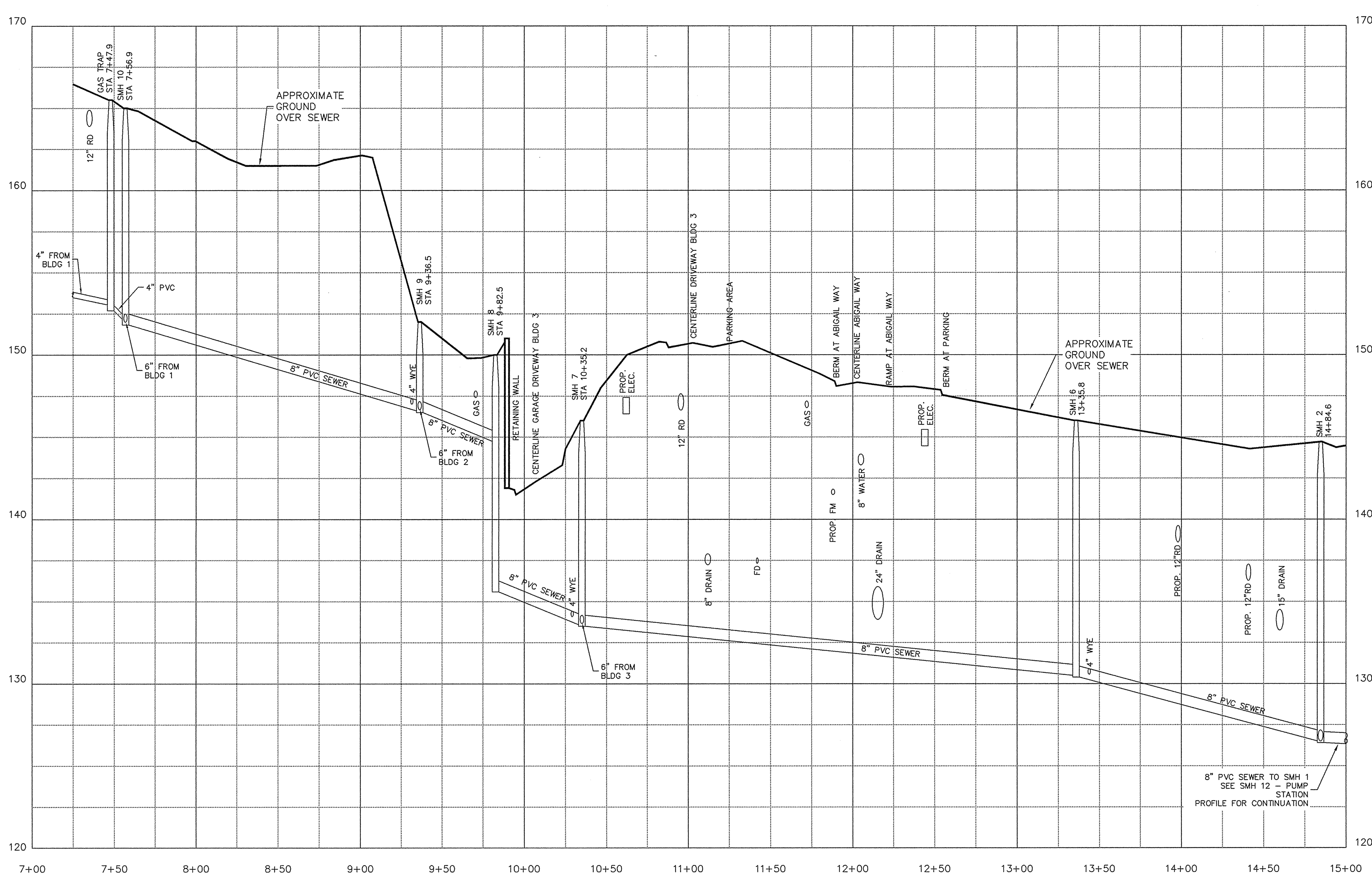

SEWER PROFILE SMH 2 TO SMH 10

HORIZONTAL SCALE: 1" = 40'
VERTICAL SCALE: 1" = 4'

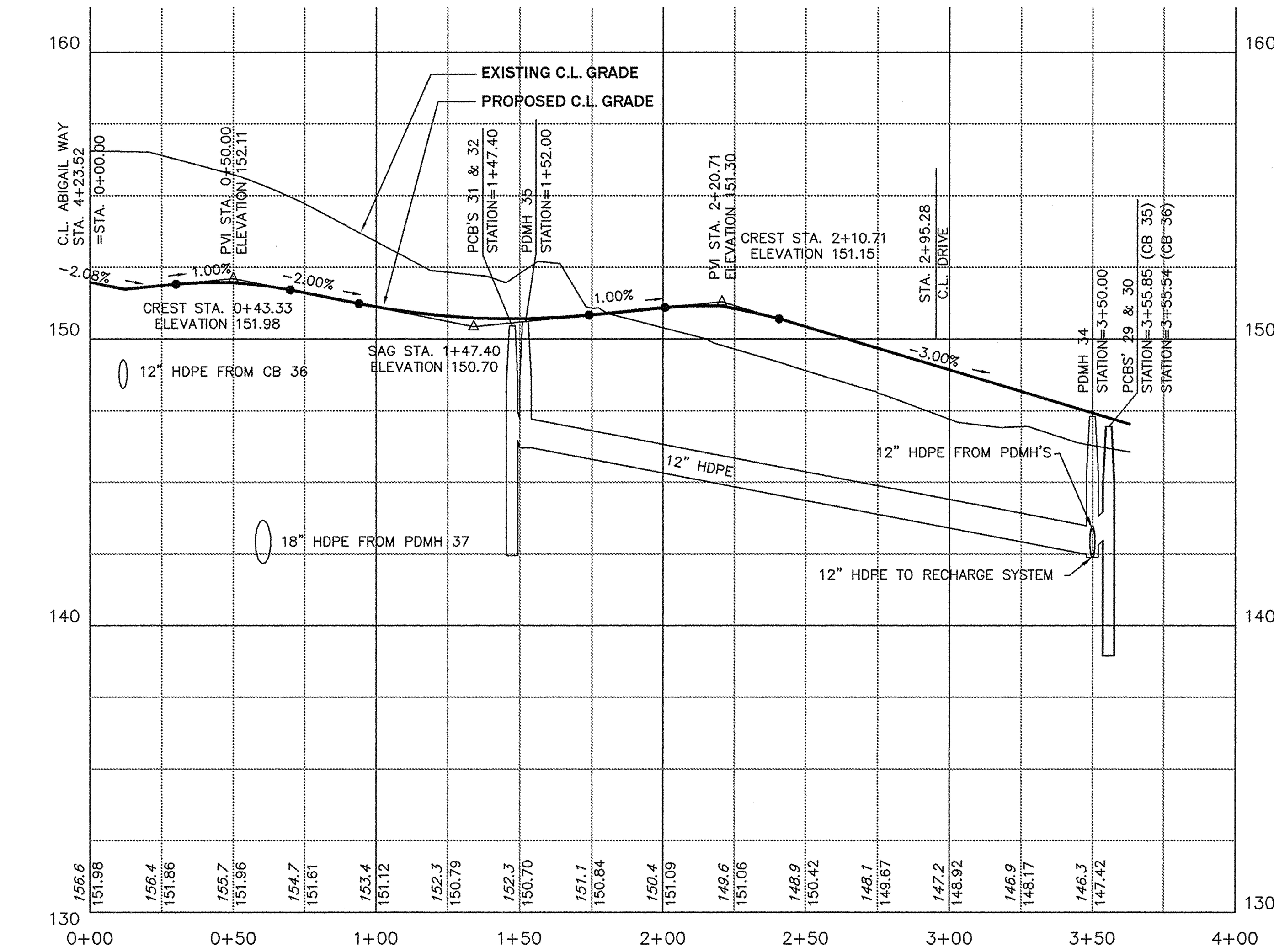

DRIVE BLDG. 3

HORIZONTAL SCALE: 1" = 40'
VERTICAL SCALE: 1" = 4'

HORIZONTAL SCALE 1"=40'
40 20 0 40 80 120
4 2 0 4 8 12
VERTICAL SCALE 1"=4'

PAUL A. MARCHIONDA CIVIL No. 30015 — COMMONWEALTH OF MASSACHUSETTS — REGISTERED PROFESSIONAL ENGINEER

REGISTRY USE ONLY

APPROVED BY THE TOWN OF READING PLANNING BOARD

DATE

REV.	DESCRIPTION	DATE
5.	MISC. REVISIONS	6/6/11
4.	ENGINEERING COMMENTS	3/14/11
3.	CON. COM. REVISIONS	3/9/11
2.	CPDC COMMENTS	2/15/11
1.	CON. COM. REVISIONS	2/8/11

DRW: DSG: CHK:

PROFILES
DRIVEWAY BUILDING 3
SEWER PROFILES

READING WOODS

in

READING, MA

Prepared For

PULTE HOMES OF NEW ENGLAND, L.L.C.
115 FLANDERS ROAD
WESTBORO, MA 01581

Marchionda & Associates, L.P.
Engineering and Planning Consultants
62 Montvale Avenue
Suite I
Stoneham, MA 02180
TEL: (781) 438-6121
FAX: (781) 438-9654
Email: engineering@marchionda.com
Website: www.marchionda.com

DATE: 1/4/11
H:\PROJECTS\487-187\PLANS\PB\6-3-2011\PROFILES.DWG
M. & A. NO.: 487-187 SCALE: AS SHOWN
SHEET 20 OF 37

© 2011 MARCHIONDA & ASSOCIATES, L.P.

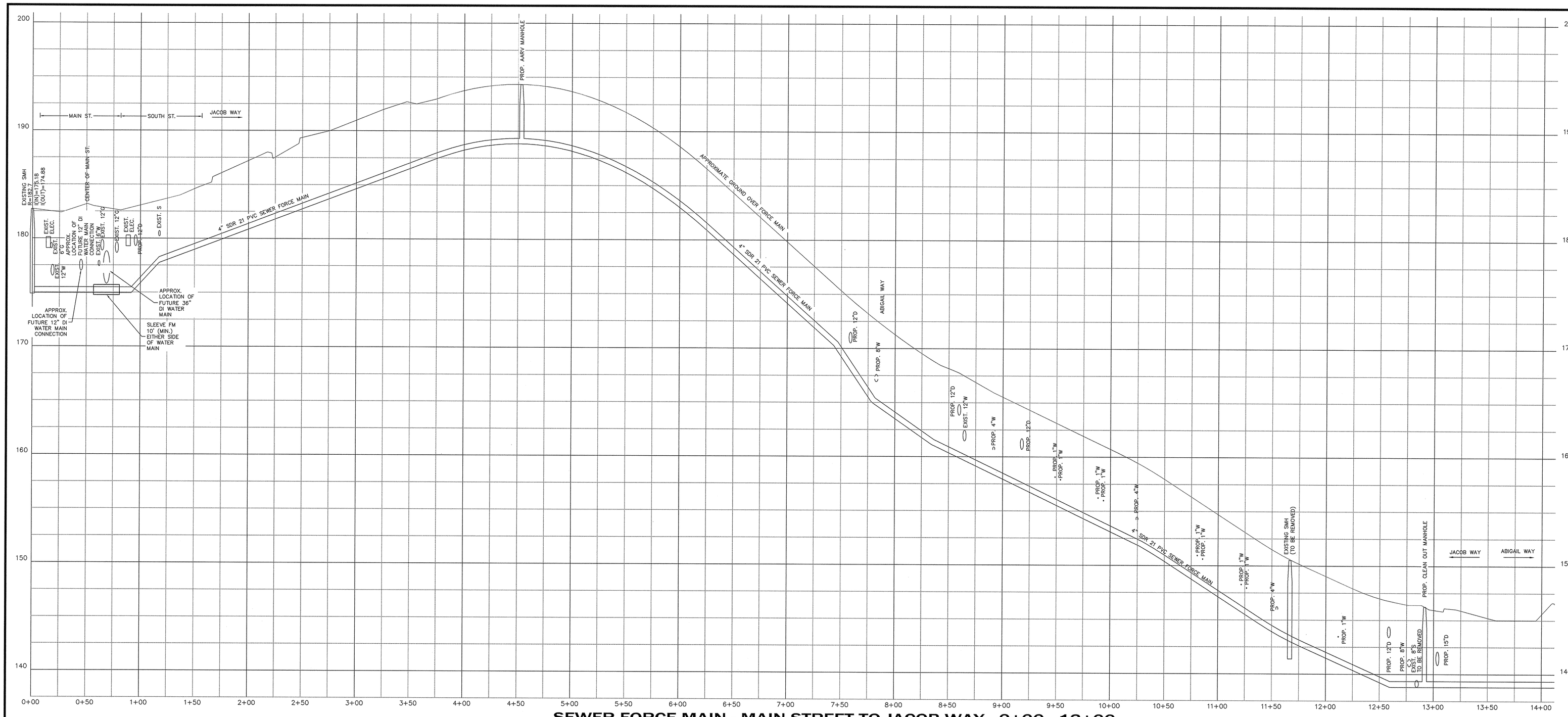

SEWER FORCE MAIN - MAIN STREET TO JACOB WAY - 0+00 - 13+00

HORIZONTAL SCALE: 1" = 40'
VERTICAL SCALE: 1" = 4'

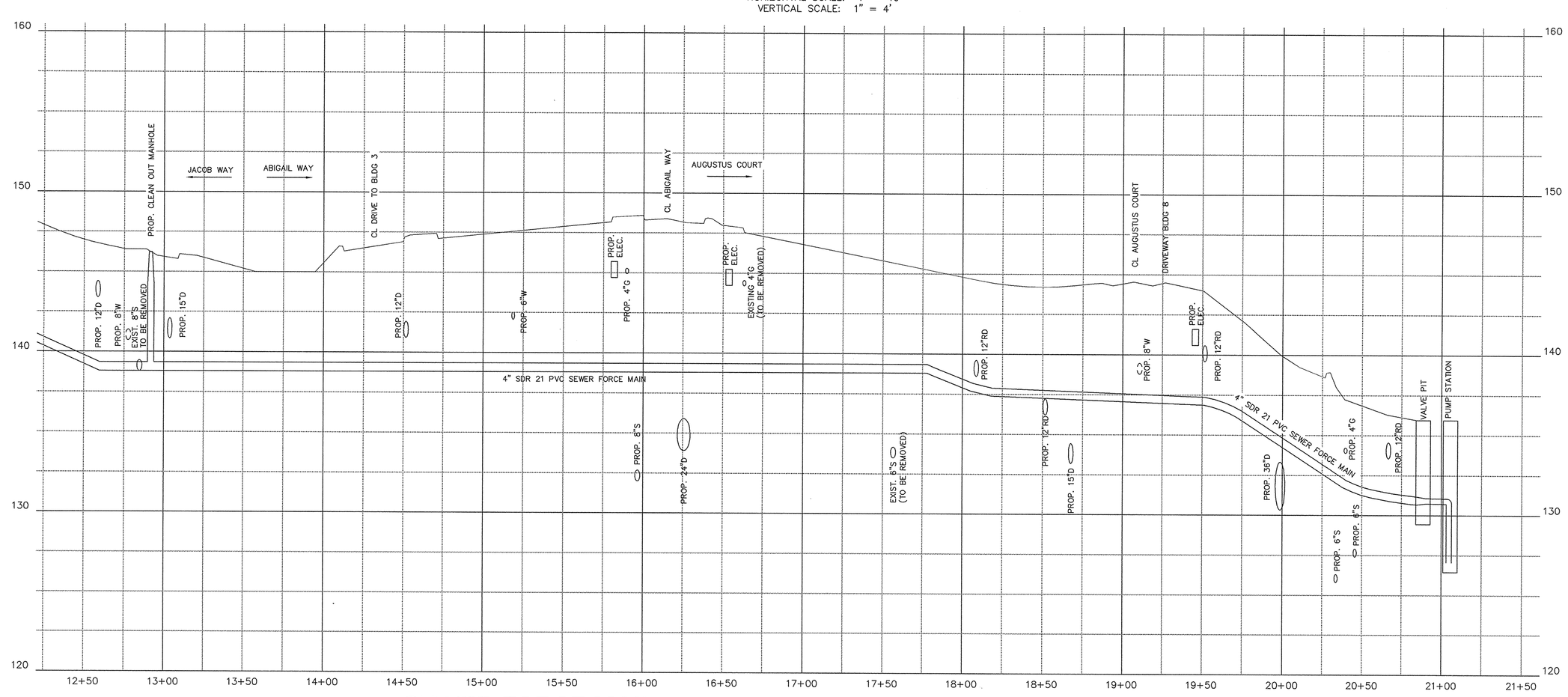

SEWER FORCE MAIN - JACOB WAY TO PUMP STATION - 13+00 - 21+00

HORIZONTAL SCALE: 1" = 40'
VERTICAL SCALE: 1" = 4'

HORIZONTAL SCALE 1"=40'
40 20 0 40 80 120
VERTICAL SCALE 1"=4'
4 2 0 4 8 12

PAUL A. MARCHIONDA CIVIL No. 30915 COMMONWEALTH OF MASSACHUSETTS PROFESSIONAL ENGINEER

REGISTRY USE ONLY

APPROVED BY THE TOWN OF READING PLANNING BOARD

DATE

REV.	DESCRIPTION	DATE
5.	MISC. REVISIONS	6/6/11
4.	ENGINEERING COMMENTS	3/14/11
3.	CON. COM. REVISIONS	3/9/11
2.	CPDC COMMENTS	2/15/11
1.	CON. COM. REVISIONS	3/8/11

DRW: DSG: CHK:

SEWER FORCE MAIN PROFILES
MAIN STREET TO JACOB WAY
JACOB WAY TO PUMP STATION

READING WOODS
in
READING, MA

Prepared For
PULTE HOMES OF NEW ENGLAND, L.L.C.
115 FLANDERS ROAD
WESTBORO, MA 01581

Marchionda & Associates, L.P.
Engineering and Planning Consultants
62 Montvale Avenue
Suite I
Stoneham, MA 02180
TEL: (781) 438-6121
FAX: (781) 438-9654
Email: engineering@marchionda.com
Website: www.marchionda.com

DATE: 1/4/11
H:\PROJECTS\487-187\PLANS\PB\6-3-2011\PROFILES.DWG
M. & A. NO.: 487-187 | SCALE: AS SHOWN
SHEET 21 OF 37

© 2011 MARCHIONDA & ASSOCIATES, L.P.

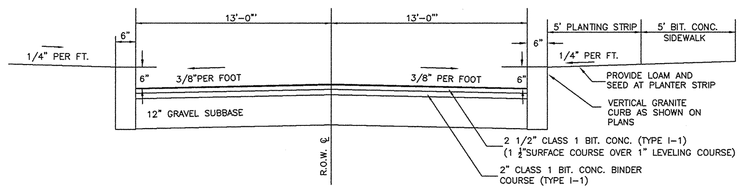

TYPICAL DRIVEWAY CROSS SECTION -JACOB WAY
N.T.S.

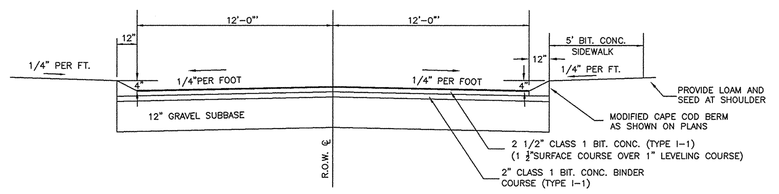

TYPICAL DRIVEWAY CROSS SECTION
N.T.S.

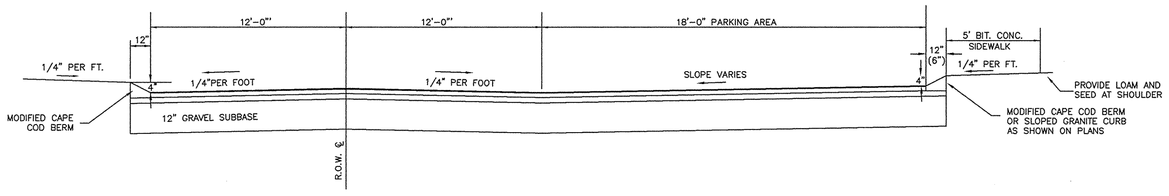

TYPICAL DRIVEWAY CROSS SECTION - WITH PARKING AREA
N.T.S.

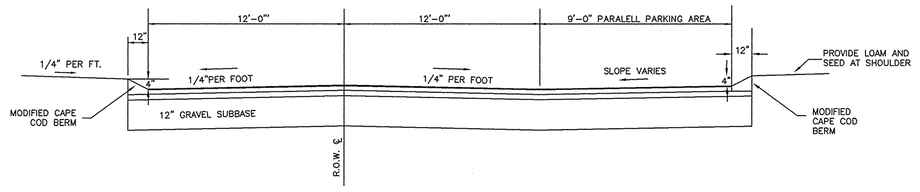

TYPICAL DRIVEWAY CROSS SECTION - WITH PARALELL PARKING AREA
N.T.S.

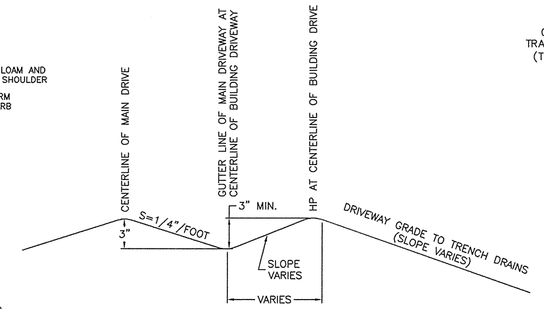

TYPICAL CROSS SECTION - BUILDING DRIVEWAY ENTRANCES
NOT TO SCALE

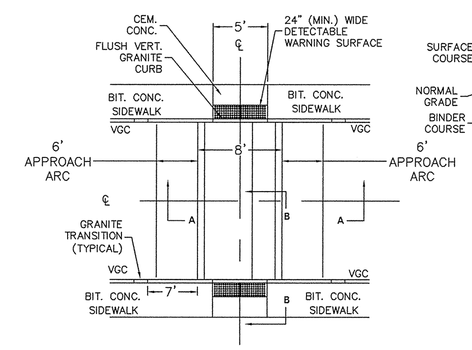

PLAN VIEW
N.T.S.

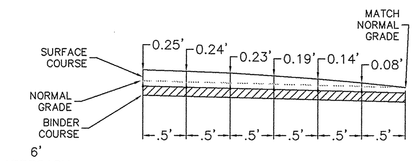

APPROACH ARC DETAIL
N.T.S.

NOTES:
1. SEE TYPICAL SECTION DETAIL FOR TYPICAL SLOPES AND DIMENSIONS.

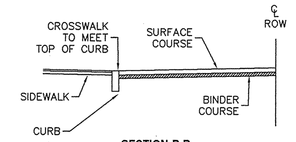

SECTION B-B
N.T.S.

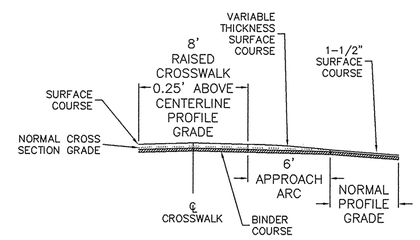

SECTION A-A
N.T.S.

RAILS SIZE/POST SPACING REQUIREMENTS

RAIL MATERIAL	MAXIMUM POST SPACING (FT)
4"x10" GRADE DENSE NO. 1	2.7'
6"x10" GRADE NO. 1	5.3'
6"x10" GRADE DENSE NO. 1	6.1'
6"x8" GRADE NO. 1	8.4'
6"x8" GRADE DENSE NO. 1	9.7'

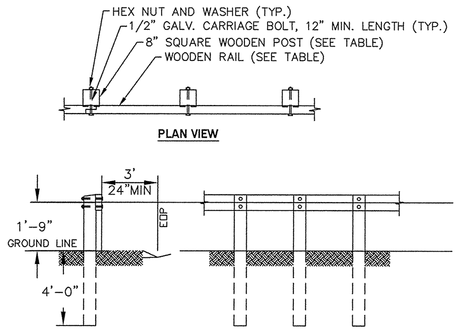

NOTES:
1. POSTS SHALL BE 8" SQUARE PRESSURE TREATED DOUGLAS FIR, OR APPROVED EQUAL.
2. RAILS SHALL BE PRESSURE DOUGLAS FIR OR APPROVED EQUAL, JOINTED AT POSTS.

WOODEN GUARD RAIL DETAIL
N.T.S.

	A	B
WALKWAY/RAMP	4"	8"
DUMPSTER PAD	6"	12"

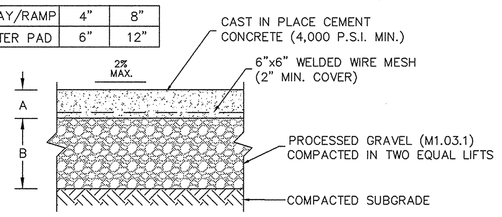

NOTES:
1. CEMENT CONCRETE PAVEMENT TO BE USED FOR LEAD WALKS TO GARDEN BUILDINGS, ACCESSIBLE RAMPS AND DUMPSTER PAD.
2. PROVIDE LIGHT BROOM FINISH PERPENDICULAR TO PEDESTRIAN/TRAFFIC FLOW.
3. PROVIDE 1/2" EXPANSION JOINT WITH PRE-MOULDED FILLER RECESSED 1/2". EXPANSION JOINTS TO BE PROVIDED 8' O.C. MAX. AND WHERE PAVEMENT ABUTS STRUCTURES OR OTHER VERTICAL SURFACES. PROVIDE 2" SMOOTH STRIP ON EACH SIDE OF EXPANSION JOINT.
4. THICKNESSES INDICATE THICKNESS AFTER COMPACTION.
5. CEMENT CONCRETE WALKS TO BE 5' WIDE.

CEMENT CONCRETE PAVEMENT SECTION
N.T.S.

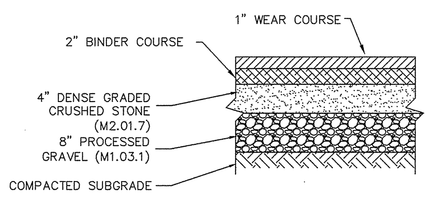

TYPICAL PAVEMENT SECTION - ACCESS DRIVES
N.T.S.

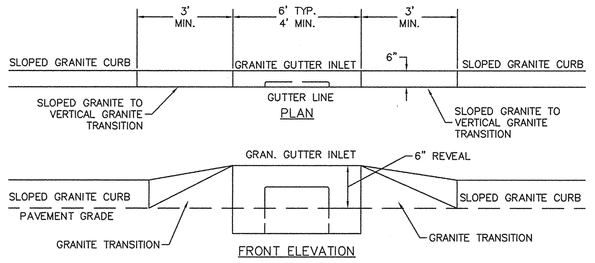

TYPICAL TRANSITION SLOPED GRANITE CURB TO VERTICAL GRANITE GUTTER INLETS
N.T.S.

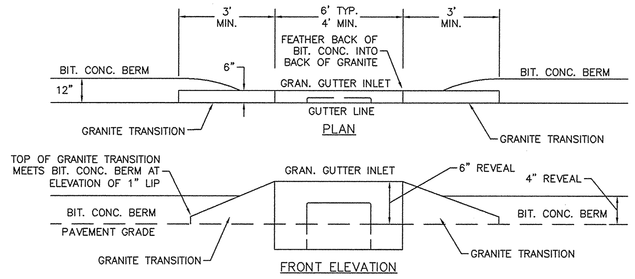

TYPICAL TRANSITION BIT. CONC. BERM TO VERTICAL GRANITE GUTTER INLETS
N.T.S.

NOTE: TRANSITIONS NOT LOCATED AT GUTTER INLETS ARE TO BE MADE IN A SIMILAR FASHION.

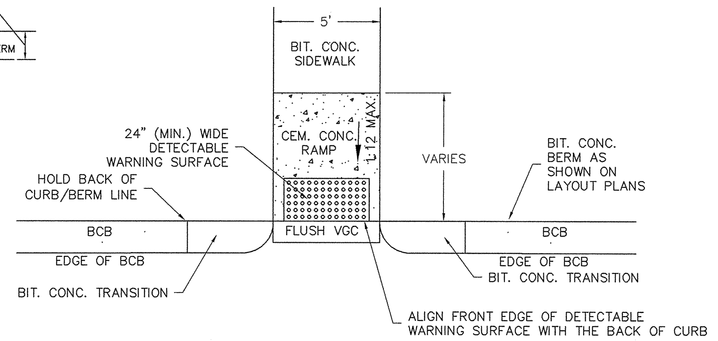

HANDICAP CURB CUT TYPE II AT BIT. CONC. BERM
N.T.S.

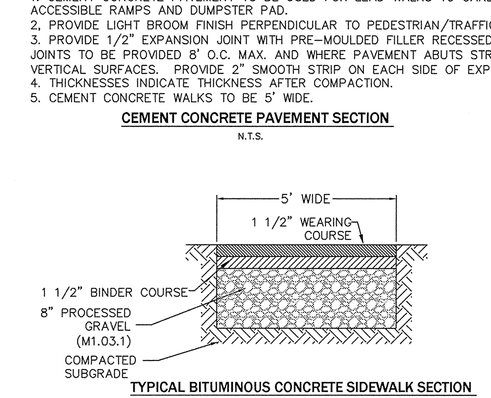

TYPICAL BITUMINOUS CONCRETE SIDEWALK SECTION
N.T.S.

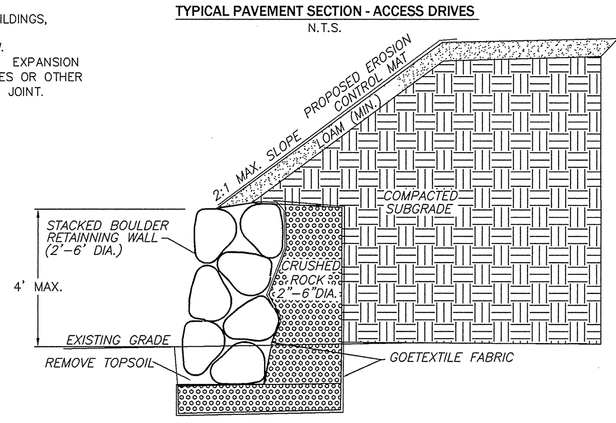

NOTES:
1) ALL RETAINING WALLS OVER 4' IN HEIGHT SHALL BE ENGINEERED WALLS.
2) ENGINEERED WALL DESIGNS SHALL BE SUBMITTED TO THE TOWN ENGINEERING DEPARTMENT FOR REVIEW AND APPROVAL.

PROPOSED BOULDER RETAINNING WALL
(OPTIONAL FOR NON-STRUCTURAL WALLS)
SCALE: N.T.S.

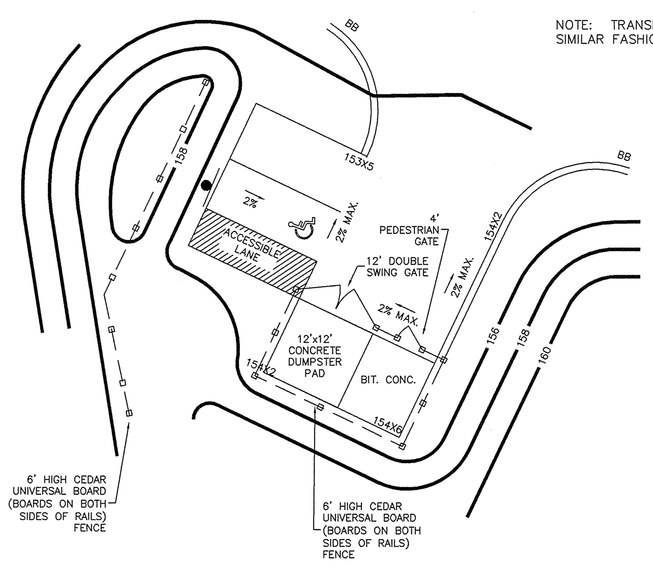

NOTES:
1) SEE CEMENT CONCRETE PAVEMENT DETAIL FOR INFORMATION ON CONCRETE SLAB. THE TRANSITION BETWEEN THE BITUMINOUS PAVEMENT AND CONCRETE SLAB SHALL BE MADE FLUSH SO AS TO CREATE A SMOOTH TRANSITION BETWEEN ADJOINING SURFACES (i.e. NO LIP).
2) WASTE RECEPTACLE AREA TO BE HANDICAPPED ACCESSIBLE (NO CROSS SLOPE >2% AND NO RUNNING SLOPE >8.3%).

DUMPSTER AREA DETAIL
N.T.S.

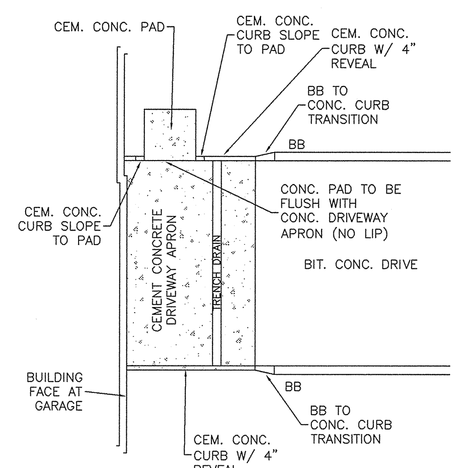

NOTE: CONCRETE CURB AND PAD TO BE POURED AT THE SAME TIME AS THE DRIVEWAY APRON.

TYPICAL GARAGE APRON DETAIL
N.T.S.

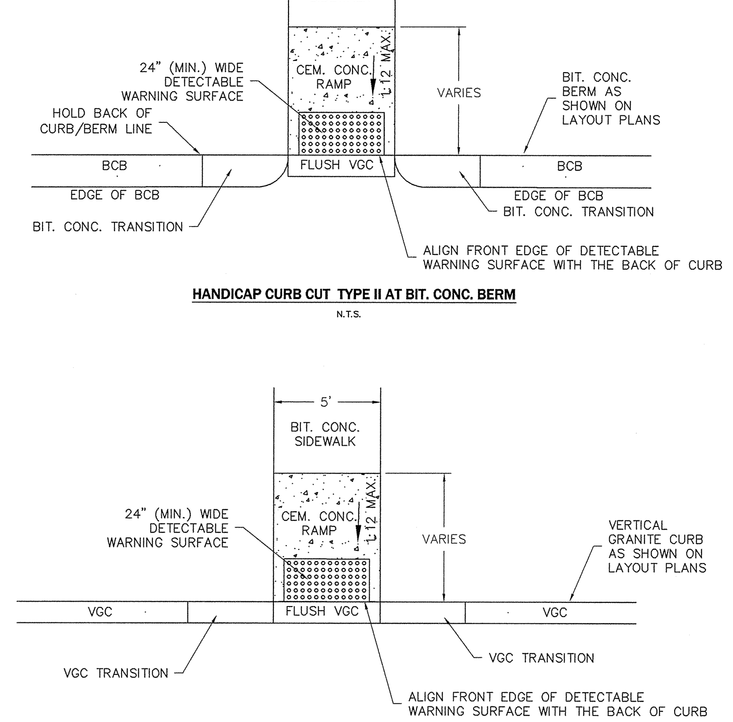

HANDICAP CURB CUT TYPE II @ VERTICAL GRANITE CURB
N.T.S.

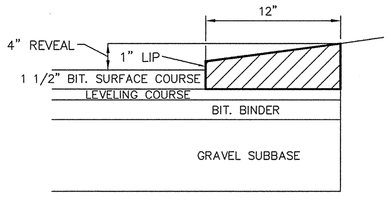

MODIFIED CAPE COD BERM DETAIL
N.T.S.

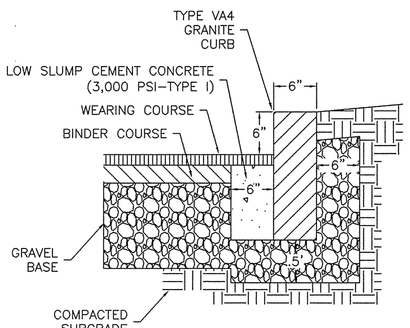

NOTE:
1) REUSE EXISTING ONSITE GRANITE CURB WHEREVER POSSIBLE.

VERTICAL GRANITE CURB DETAIL
NOT TO SCALE

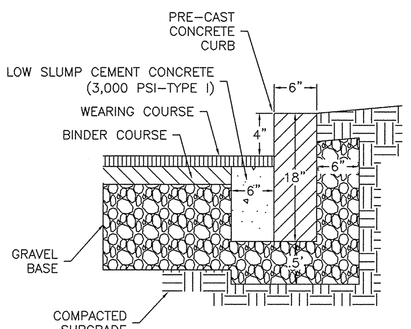

CEMENT CONCRETE CURB DETAIL
NOT TO SCALE

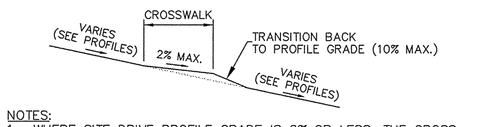

NOTES:
1. WHERE SITE DRIVE PROFILE GRADE IS 2% OR LESS, THE CROSS SLOPE OF THE CROSSWALK SHALL MATCH THE ROAD GRADE (I.E. NO ADJUSTMENT NECESSARY).
2. THIS DETAIL APPLIES TO ALL CROSSWALKS WITHIN THE PROPOSED DEVELOPMENT.

TYPICAL CROSSWALK SECTION
N.T.S.

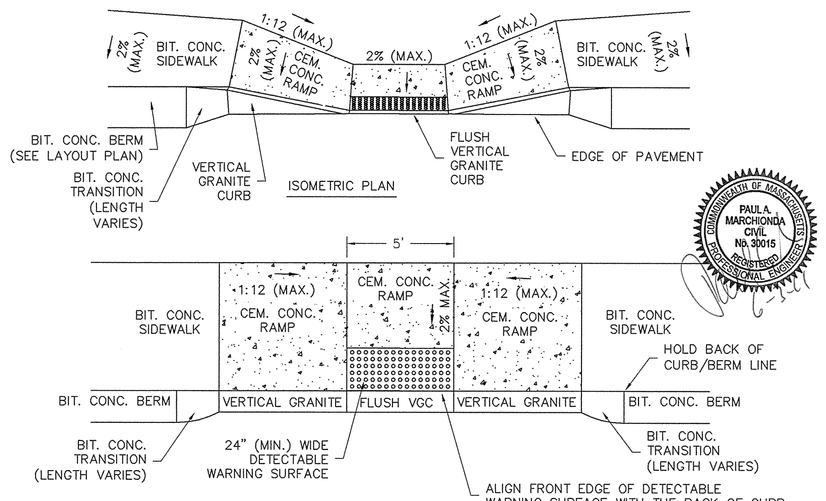

NOTES:
1. REPRESENTATION OF CURB CUT TRANSITIONS ON THE PLANS INCLUDING DIMENSIONS AND SPOT GRADING IS APPROXIMATE. ACTUAL DIMENSIONS AND GRADING OF CURB CUT TRANSITIONS SHALL BE DETERMINED BY THE CONTRACTOR IN THE FIELD ON A CASE BY CASE BASIS IN ORDER TO COMPLY WITH THIS DETAIL.
2. RAMP TO COMPLY WITH ADA REGULATIONS AND GUIDELINES.

HANDICAP CURB CUT TYPE I
N.T.S.

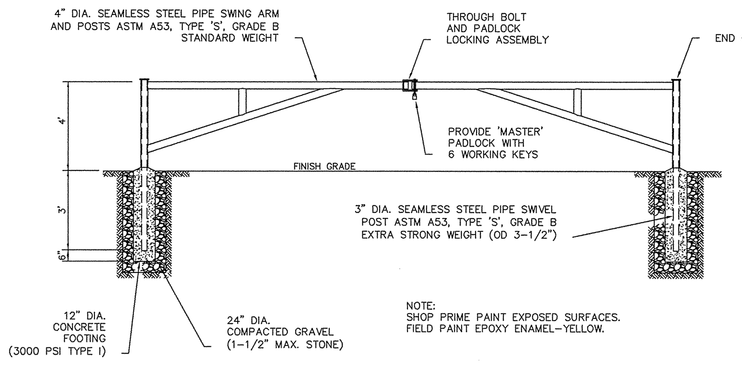

NOTE:
SHOP PRIME PAINT EXPOSED SURFACES. FIELD PAINT EPOXY ENAMEL-YELLOW.

EMERGENCY ACCESS GATE
N.T.S.

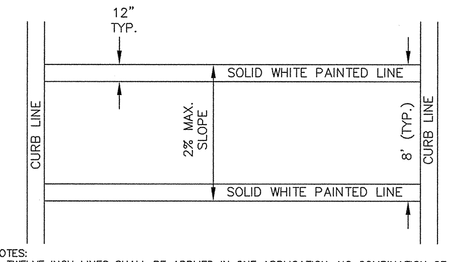

NOTES:
1. TWELVE INCH LINES SHALL BE APPLIED IN ONE APPLICATION, NO COMBINATION OF LINES (IE. TWO – SIX INCH LINES) WILL BE ACCEPTED.
2. CROSSWALK LINES TO BE PERPINDICULAR TO THE CURBLINE AND TO BE THE UNIFORMLY SPACED AND ALIGNED.
3. CROSSWALK SIDESLOPE NOT TO EXCEED 2%

CROSSWALK
N.T.S.

© 2011 MARCHIONDA & ASSOCIATES, L.P.

REGISTRY USE ONLY

APPROVED BY THE TOWN OF READING PLANNING BOARD

DATE

REV.	DESCRIPTION	DATE
5.	MISC. REVISIONS	6/17/11
4.	ENGINEERING COMMENTS	3/14/11
3.	CON. COM. REVISIONS	3/9/11
2.	CPDC COMMENTS	2/15/11
1.	CON. COM. REVISIONS	2/8/11

DRW: DSG: CHK:

DETAIL SHEET

READING WOODS
in
READING, MA
Prepared For
PULTE HOMES OF NEW ENGLAND, L.L.C.
115 FLANDERS ROAD
WESTBORO, MA 01581

Marchionda & Associates, L.P.
Engineering and Planning Consultants
62 Montvale Avenue
Suite I
Stoneham, MA 02180
TEL: (781) 438-6121
FAX: (781) 438-9654
Email: engineering@marchionda.com
Website: www.marchionda.com

DATE: 1/4/11
H:\PROJECTS\487-187\PLANS\PB\6-2011\DETAILS.DWG
M. & A. NO.: 487-187 SCALE: NOT TO SCALE

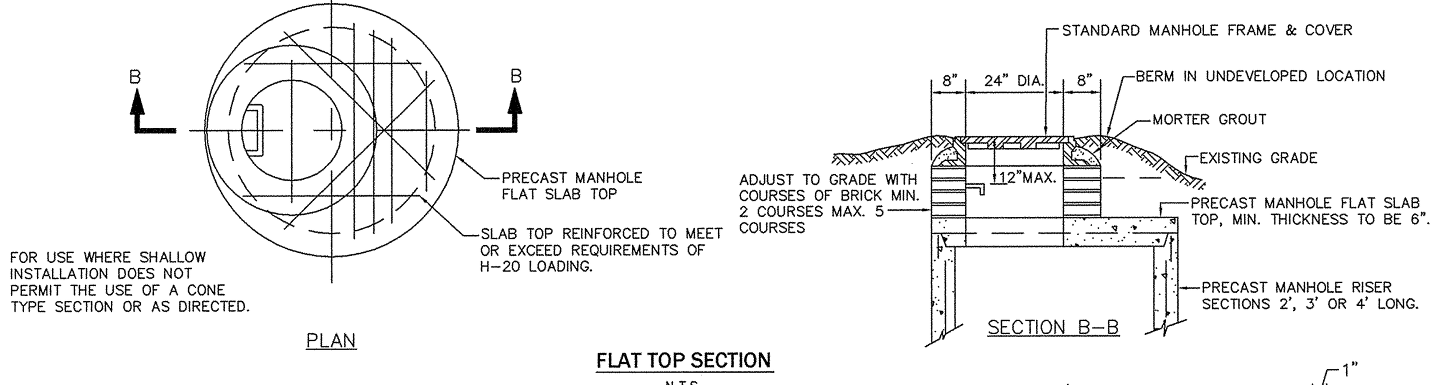

FLAT TOP SECTION
N.T.S.

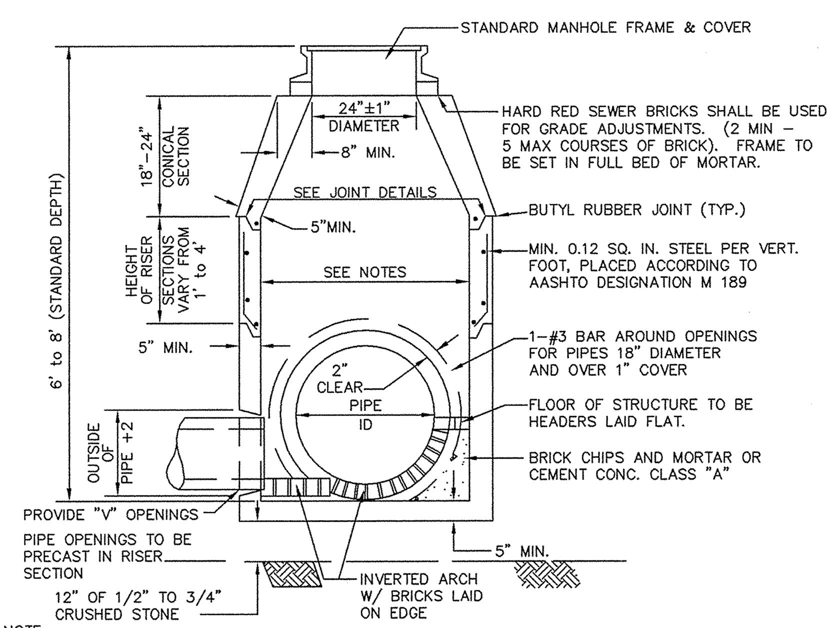

NOTE:
1. MANHOLE TO BE RATED FOR H-20 LOADING.
2. MANHOLES SHALL BE 4-FOOT DIAMETER UNLESS OTHERWISE REQUIRED TO ACCOMODATE THE CONFIGURATION OF OR THE NUMBER OF PIPES ENTERING AND DISCHARGING THE STRUCTURE. MANHOLES SHALL BE 6-FOOT DIAMETER WHERE THE PIPE DIAMETER IS 24" OR GREATER.

PRECAST CONCRETE MANHOLE DETAILS
N.T.S.

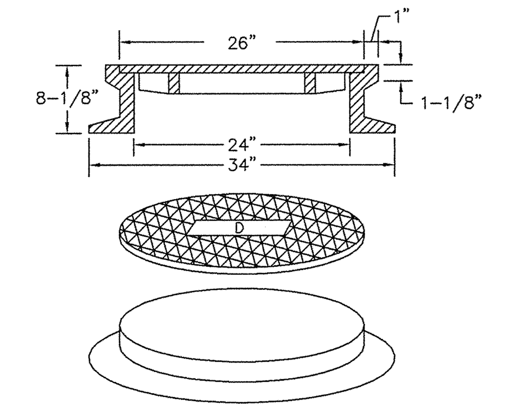

FRAME & COVER LE BARON FOUNDRY CAT. NO. LT101, NEENAH FOUNDRY NO. 1720-A OR APPROVED EQUAL
TOTAL WEIGHT: 475 LBS. (MIN.) COVER MUST HAVE A DIAMOND PATTERN WITH THE LETTER "D" CAST IN 3" HIGH LETTERS

DRAIN MANHOLE FRAME & COVER
N.T.S.

GENERAL DRAINAGE NOTES
1. ALL DRAIN LINES SHALL BE CORRUGATED HIGH DENSITY POLYETHYLENE (HDPE) WITH SMOOTH INTERIOR – A.D.S. N-12 OR APPROVED EQUAL. 2. PIPE DIAMETER FOR THE STREET DRAINAGE SYSTEMS SHALL BE 12 INCHES UNLESS OTHERWISE SPECIFIED. PIPE DIAMETER FOR THE ROOF DRAIN COLLECTION SYSTEMS SHALL BE 12 INCHES UNLESS OTHERWISE SPECIFIED. PIPE DIAMETER FOR THE ROOF DRAIN LEADERS SHALL BE 6 INCHES UNLESS OTHERWISE SPECIFIED. PIPE DIAMETER FOR FOOTING DRAINS SHALL BE 6 INCHES UNLESS OTHERWISE SPECIFIED.
3. ALL FIELD CUTTING OF PIPE SHALL BE DONE IN ACCORDANCE TO MANUFACTURER'S SPECIFICATIONS.
4. ALL CATCH BASINS TO HAVE DEBRIS TRAPS AS SHOWN IN DETAIL. ALL AREA DRAINS ARE TO BE PRECAST CONSRETE CATCH BASINS WITH OUT DEBRIS TRAPS.
5. ALL EXISTING DRAIN LINES TO BE UTILIZED SHALL BE TELEVISION INSPECTED FOR INTEGRITY BEFORE RE-USE. THE TOWN ENGINEERING DIVISION SHALL BE NOTIFIED OF ALL INSPECTIONS 36 HOURS IN ADVANCE. LINES DEEMED UNSUITABLE FOR RE-USE SHALL BE REPLACED IN THEIR ENTIRETY.
6. ALL MANHOLE COVERS SHALL BE TOWN STANDARD COVERS.

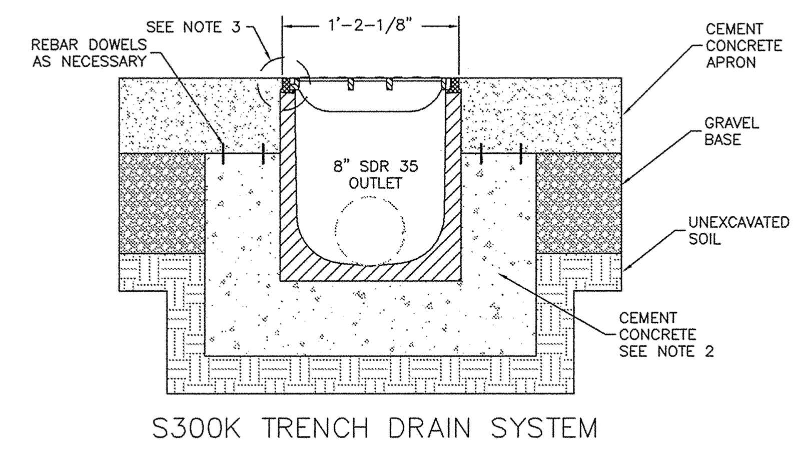

NOTES:
1. FRAME AND GRATE SHALL BE ITEM S300K BY ACO POLYMER PRODUCTS, INC. (WWW.ACOUSA.COM).
2. A MINIMUM CONCRETE STRENGTH OF 3000 PSI IS RECOMMENDED. THE CONCRETE SHOULD BE VIBRATED TO ELIMINATE AIR POCKETS.
3. THE FINISHED LEVEL OF THE CONCRETE SURROUND MUST BE APPROX. 1/8" ABOVE THE TOP OF THE CHANNEL EDGE.
4. REFER TO ACO'S LATEST INSTALLATION INSTRUCTIONS FOR COMPLETE DETAILS.
5. REFER TO ARCHITECTURAL PLANS FOR A DETAIL OF THE CONCRETE TRENCH.
6. FRAME SHALL BE TIED INTO CONCRETE AS RECOMMENDED BY THE MANUFACTURER. GRATE SHALL BE SECURED AS RECOMMENDED BY THE MANUFACTURER.
7. TRENCHES SHALL ACCOMMODATE AN 8" HDPE OUTLET PIPE. TRENCH DIMENSIONS SHOWN ARE CONSIDERED TO BE A MINIMUM.
5. TRENCH DRAINS SHALL BE 24 FEET IN LENGTH (REFER TO PLANS).
6. THE SYSTEM SHALL BE 12" NOMINAL INSIDE WIDTH AND 14" OVERALL WIDTH. THE SYSTEM SHALL BE BUILT WITH A SLOPE OF 0.6%.

TRENCH DRAIN DETAIL
N.T.S.

Rinker MATERIALS — Concrete Pipe Division

STC 450i Precast Concrete Stormceptor®
(450 U.S. Gallon Capacity)

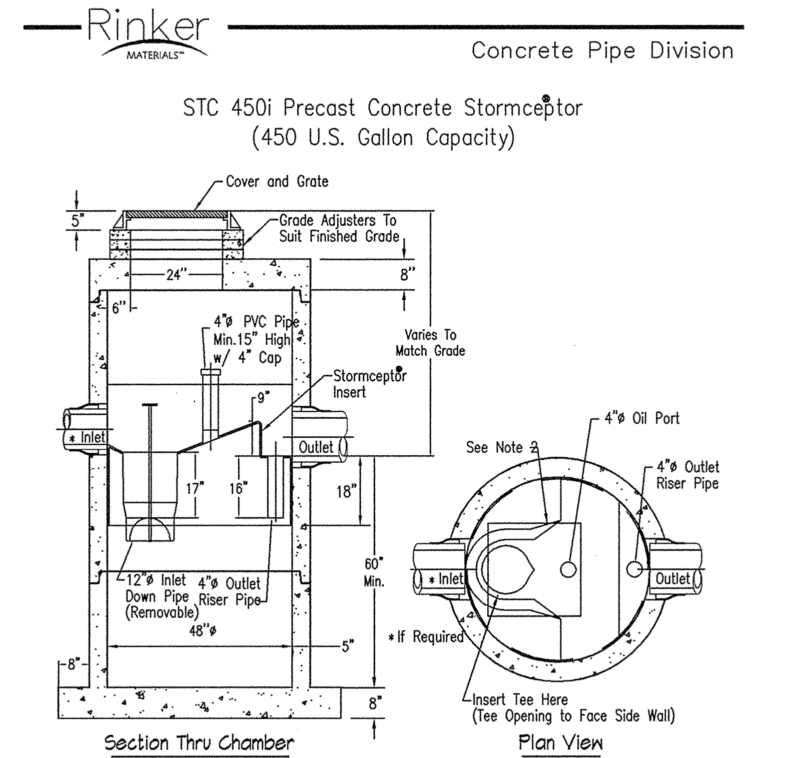

Notes:
1. The Use Of Flexible Connection is Recommended at The Inlet and Outlet Where Applicable.
2. The Cover Should be Positioned Over The Inlet Drop Pipe and The Oil Port.
3. The Stormceptor System is protected by one or more of the following U.S. Patents: #4985148, #5498331, #5725760, #5753115, #5849181, #6068765, #6371690.
4. Contact a Concrete Pipe Division representative for further details not listed on this drawing.

Rinker 027

Rinker MATERIALS — Concrete Pipe Division

STC 7200 Precast Concrete Stormceptor®
(7200 U.S. Gallon Capacity)

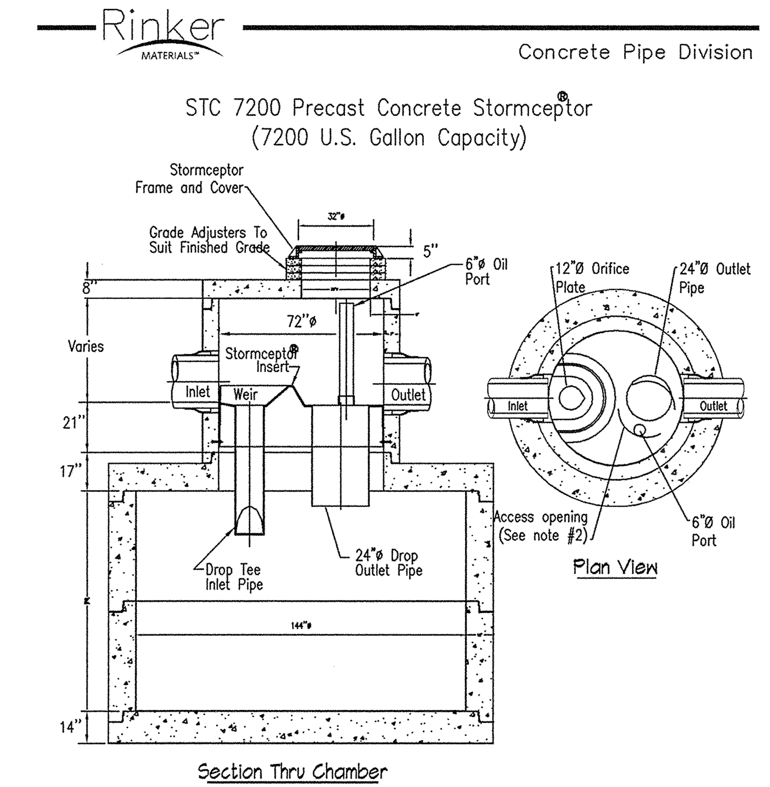

Notes:
1. The Use Of Flexible Connection is Recommended at The Inlet and Outlet Where Applicable.
2. The Cover Should be Positioned Over The Outlet Drop Pipe and The Oil Port.
3. The Stormceptor System is protected by one or more of the following U.S. Patents: #4985148, #5498331, #5725760, #5753115, #5849181, #6068765, #6371690.
4. Contact a Concrete Pipe Division representative for further details not listed on this drawing.

Rinker 035

Rinker MATERIALS — Concrete Pipe Division

Stormceptor® Disc
Disc Type Insert Detail

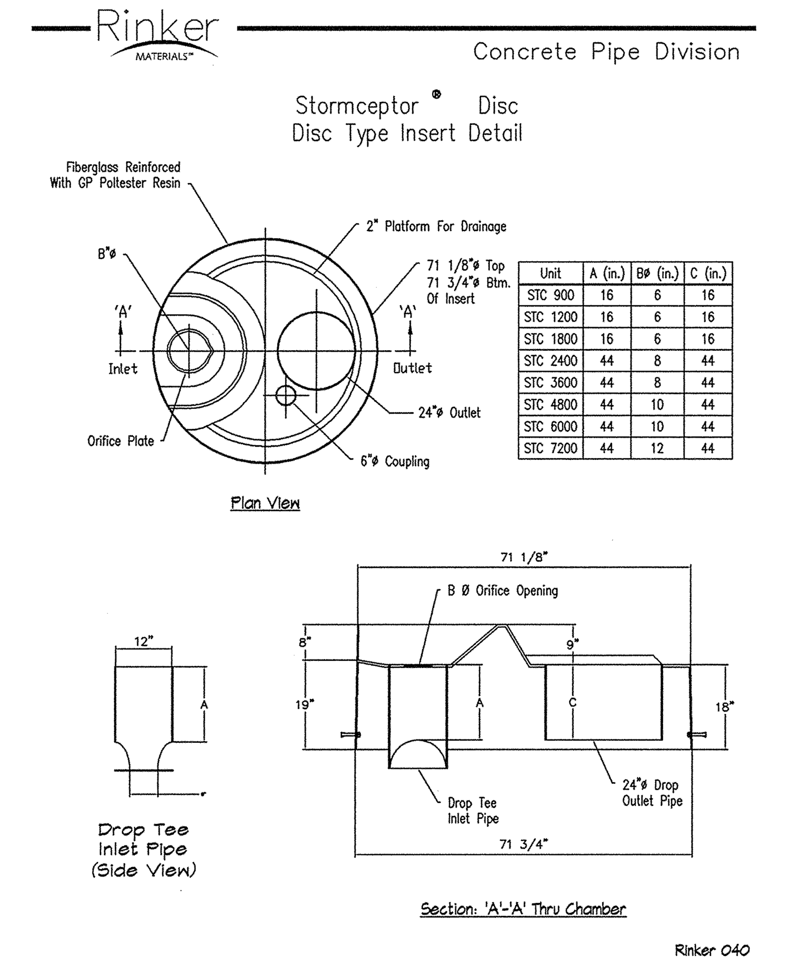

Unit	A (in.)	Bø (in.)	C (in.)
STC 900	16	6	16
STC 1200	16	6	16
STC 1800	16	6	16
STC 2400	44	8	44
STC 3600	44	8	44
STC 4800	44	10	44
STC 6000	44	10	44
STC 7200	44	12	44

Rinker 040

Rinker MATERIALS — Concrete Pipe Division

STC 900 Precast Concrete Stormceptor®
(900 U.S. Gallon Capacity)

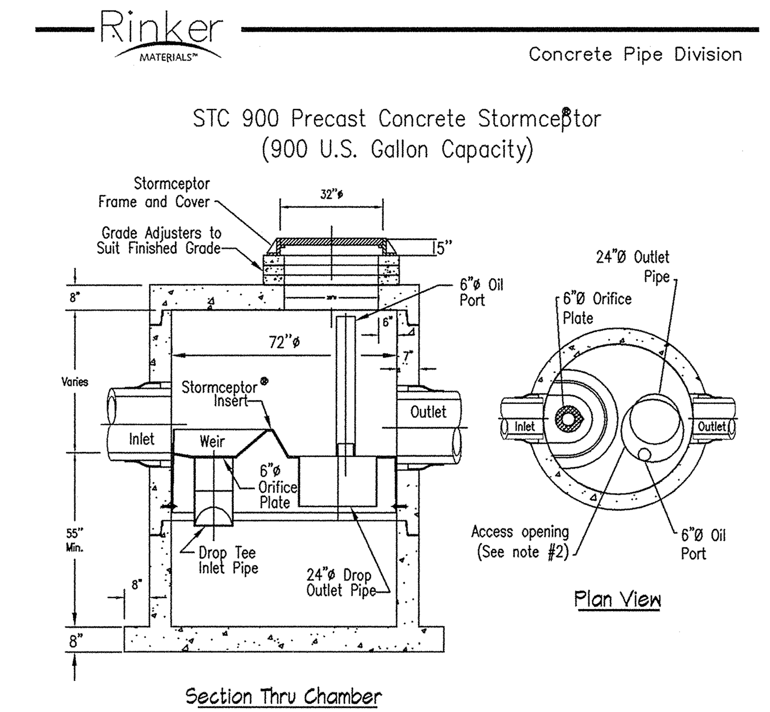

Notes:
1. The Use Of Flexible Connection is Recommended at The Inlet and Outlet Where Applicable.
2. The Cover Should be Positioned Over The Outlet Drop Pipe and The Oil Port.
3. The Stormceptor System is protected by one or more of the following U.S. Patents: #4985148, #5498331, #5725760, #5753115, #5849181, #6068765, #6371690.
4. Contact a Concrete Pipe Division representative for further details not listed on this drawing.

Rinker 028

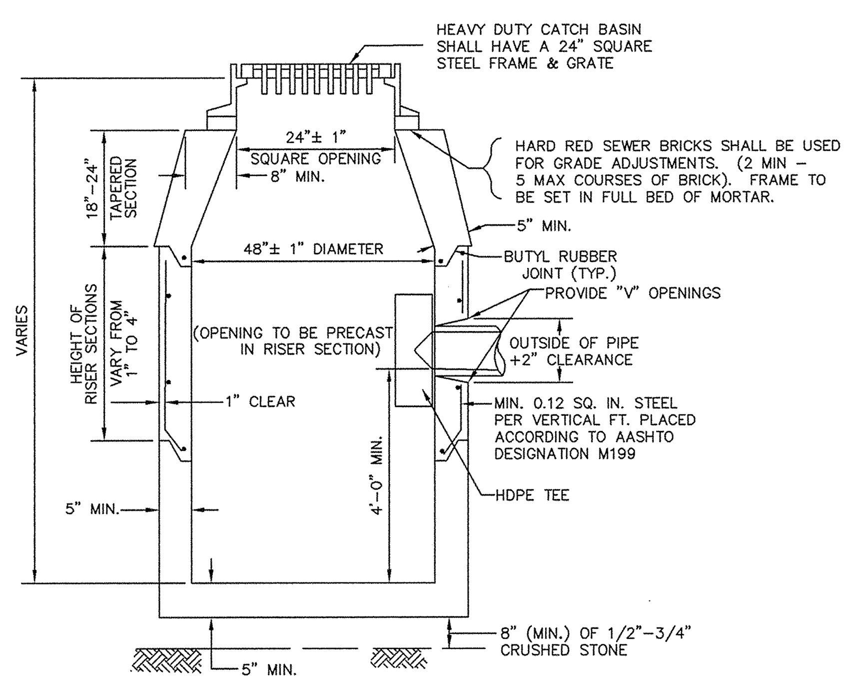

NOTES:
1. CATCH BASINS TO BE RATED FOR H-20 LOADING.
2. NO BELL ENDS IN CATCH BASIN. CONNECTIONS TO BE TIGHTLY SEALED.
3. STANDARD GRATE TO BE USED WHEN THE LONGITUDINAL SLOPE OF ROAD IS LESS THAN 6%. CASCADE TYPE GRATE TO BE USED WHEN THE LONGITUDINAL SLOPE OF ROAD EXCEEDS 6%.

PRECAST CONCRETE CATCH BASIN DETAILS
N.T.S.

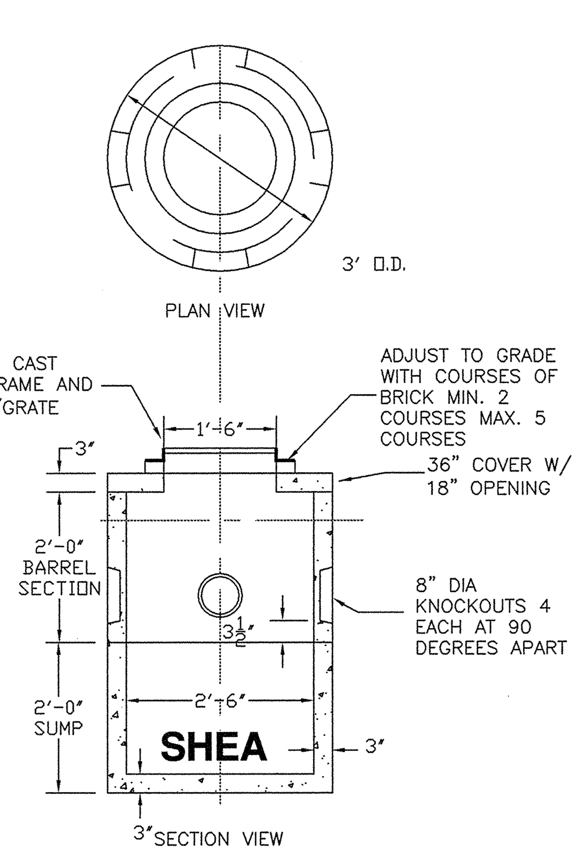

NOTES:
1. CONCRETE: 4,000 PSI MINIMUM AFTER 28 DAYS.
2. OPTIONAL 1', 2' OR 3' RISERS MAY BE USED AS NECESSARY TO BRING TOP OF STRUCTURE TO GRADE.

30" DIA. MANHOLE/AREA DRAIN
NOT TO SCALE

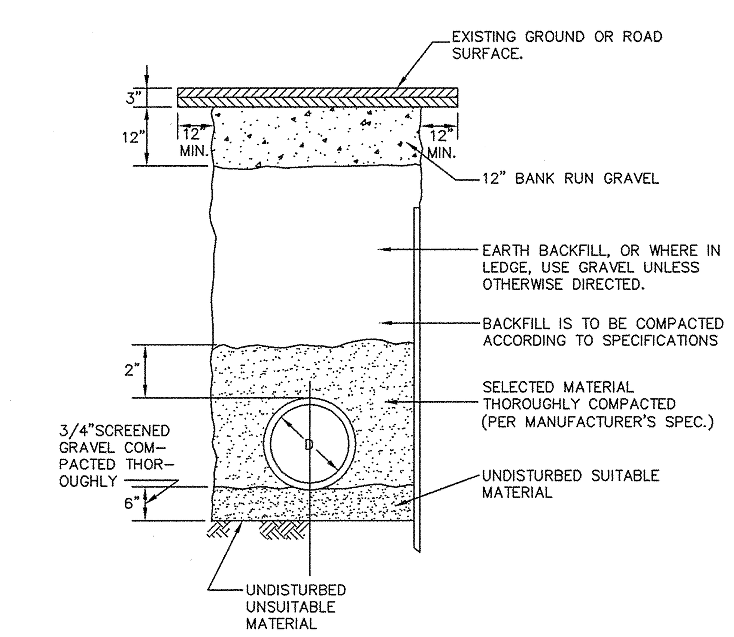

TYPICAL DRAIN TRENCH DETAIL
N.T.S.

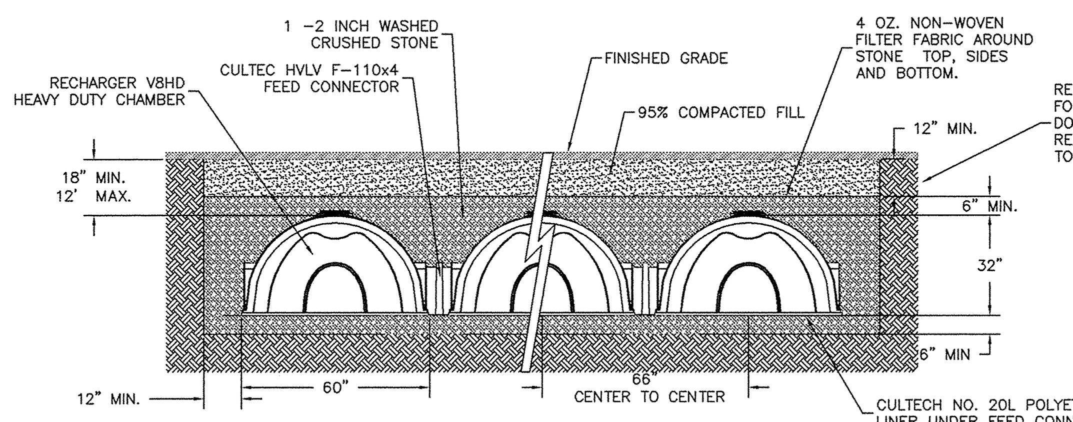

NOTES:
1. INFILTRATION SYSTEM SHALL BE CONSTRUCTED FROM CULTECH RECHARGER V8HD CHAMBERS OR APPROVED EQUAL.

GROUNDWATER RECHARGE SYSTEM
CROSS SECTION
N.T.S.

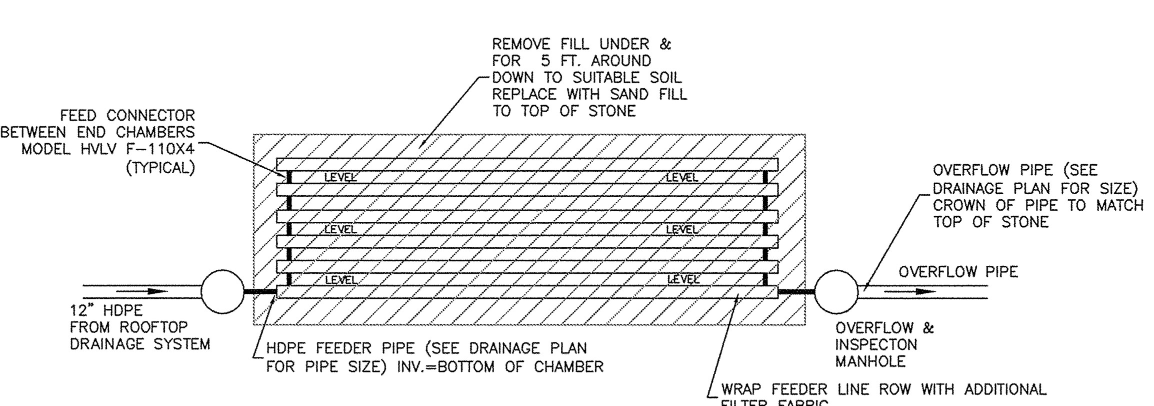

GROUNDWATER RECHARGE SYSTEM
SYSTEM SCHEMATIC
N.T.S.

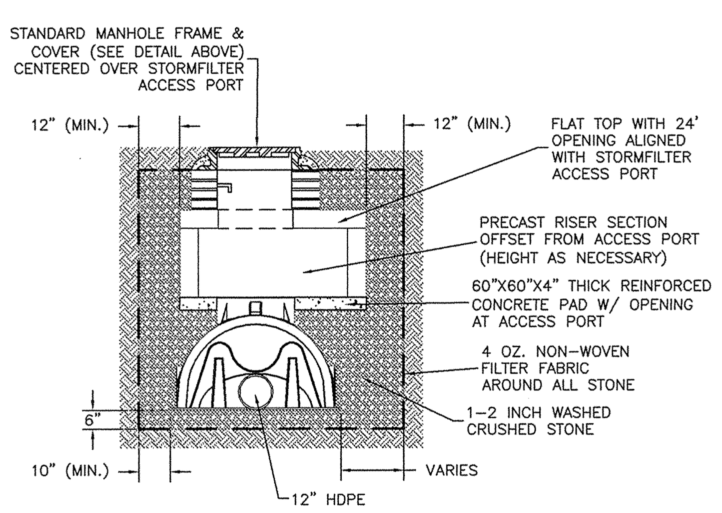

CROSS SECTION
WITH OPTIONAL PRECAST RISER
N.T.S.

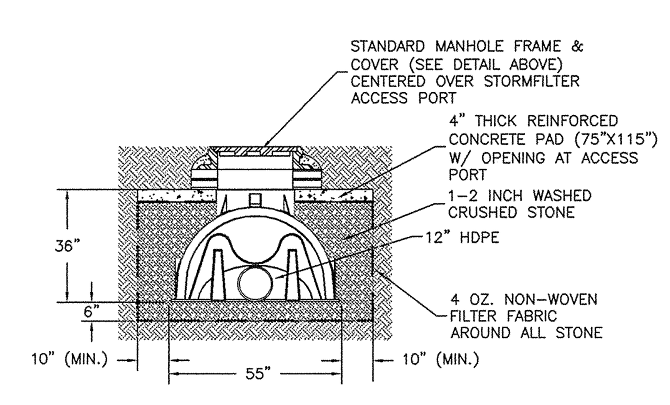

CROSS SECTION
N.T.S.

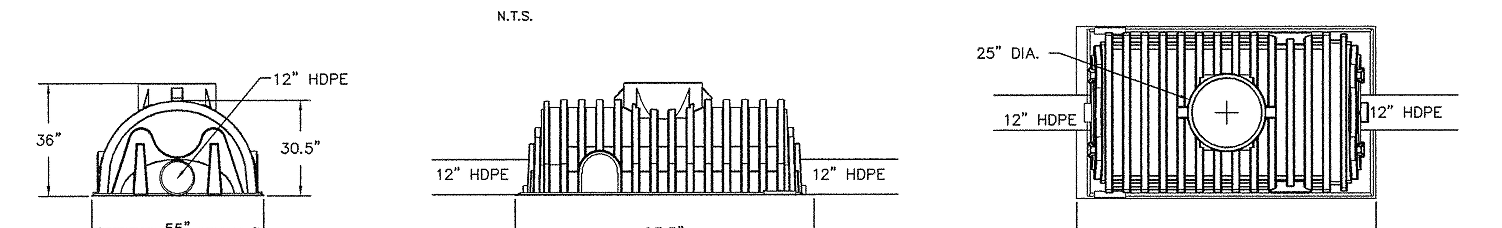

NOTES:
1. WATER QUALITY UNITS TO BE CULTEC STORMFILTER MODEL 330.

WATER QUALITY UNITS
N.T.S.

RECHARGE SYSTEM SPECIFICATIONS

SYSTEM #	CONFIGURATION (# ROWS) X (# CHAMBERS/ROW)	TOTAL CHAMBERS	BOTTOM OF STONE	BOTTOM OF CHAMBERS	TOP OF STONE	OVERFLOW INVERT
1	3 X 4	12	159.50	160.00	164.20	163.20
2	6 X 9	54	137.30	138.30	143.0	142.0
3	2 X 7	14	140.50	141.50	146.20	145.20
4	3 X 6	18	134.50	135.50	140.20	139.20
5	6 X 9	54	135.00	136.00	140.70	139.70
6	3 X 12	36	130.30	131.30	136.00	135.00
7	3 X 7	21	132.50	133.50	138.20	137.20
8	2 X 5	10	129.00	129.50	133.70	132.70

RECHARGE SYSTEM NOTES:
1. THE LIMIT OF ALL RECHARGE SYSTEMS SHALL BE PROTECTED BY STAKED HAYBALES AROUND THE FULL PERIMETER.
2. PRIOR TO THE PLACEMENT OF ANY STONE OR FILL MATERIAL IN ANY RECHARGE SYSTEM, THE BOTTOM OF EXCAVATION SHALL BE INSPECTED BY THE DESIGN ENGINEER ACCOMPANIED BY AN AGENT OF THE CONSERVATION COMMISSION.
3. ANY FILL ASSOCIATED WITH RECHARGE AREAS SHALL BE CLEAN SANDY FILL, FREE FROM FINES AND DEBRIS. FILL TO HAVE AN INFILTRATION RATE FASTER THAN 8"/HOUR AFTER PLACEMENT.

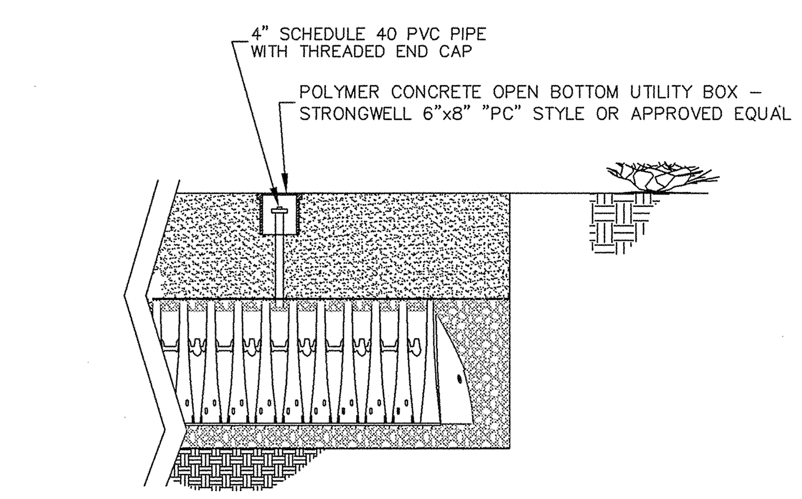

NOTES:
1. PROVIDE 6" (MIN.) BEDDING OF 3/4" CRUSHED STONE FOR UTILITY BOX.
2. PROVIDE ONE INSPECTION PORT IN THE CENTER OF EACH RECHARGE BASIN

GROUNDWATER RECHARGE SYSTEM
INSPECTION PORT DETAIL
N.T.S.

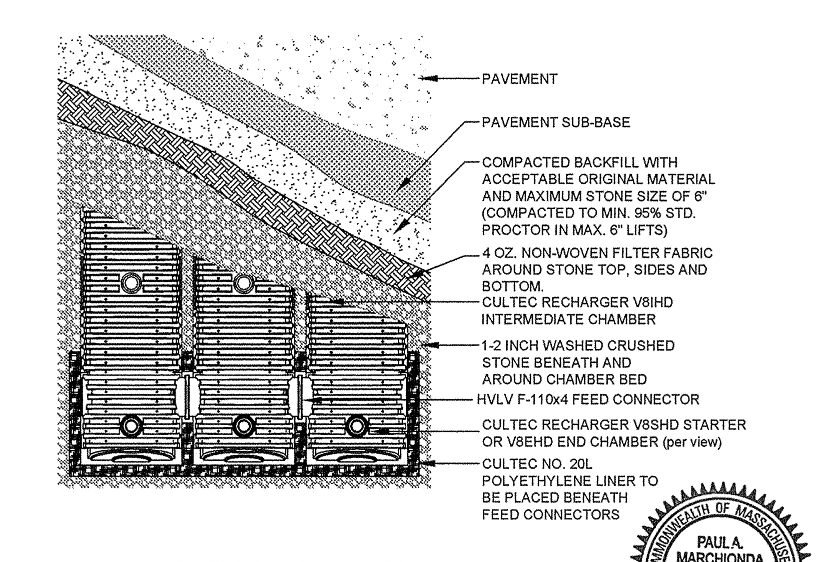

GROUNDWATER RECHARGE SYSTEM
PLAN VIEW
N.T.S.

COMMONWEALTH OF MASSACHUSETTS — PAUL A. MARCHIONDA — CIVIL — No. 30015 — REGISTERED PROFESSIONAL ENGINEER

© 2011 MARCHIONDA & ASSOCIATES, L.P.

REGISTRY USE ONLY

APPROVED BY THE TOWN OF READING PLANNING BOARD

DATE

DRW: DSG: CHK:

REV.	DESCRIPTION	DATE
5.	MISC. REVISIONS	6/??/11
4.	ENGINEERING COMMENTS	3/14/11
3.	CON. COM. REVISIONS	3/9/11
2.	CPDC COMMENTS	2/15/11
1.	CON. COM. REVISIONS	2/8/11

DETAIL SHEET

READING WOODS
in
READING, MA
Prepared For
PULTE HOMES OF NEW ENGLAND, L.L.C.
115 FLANDERS ROAD
WESTBORO, MA 01581

Marchionda & Associates, L.P.
Engineering and Planning Consultants
62 Montvale Avenue
Suite I
Stoneham, MA 02180
TEL: (781) 438-6121
FAX: (781) 438-9654
Email: engineering@marchionda.com
Website: www.marchionda.com

DATE: 1/4/11
H:\PROJECTS\487-187\PLANS\PB\6-2011\DETAILS.DWG
M. & A. NO.: 487-187 | SCALE: NOT TO SCALE

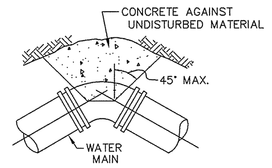

TYPICAL BEND

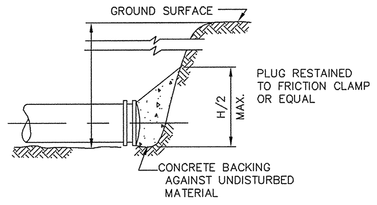

TYPICAL PLUG

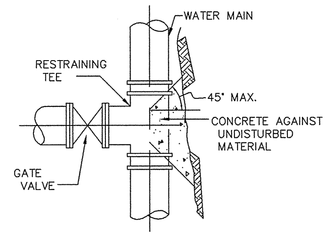

TYPICAL TEE

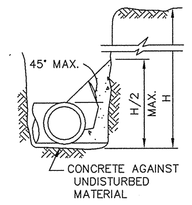

TYPICAL SECTION

NOTE: CONCRETE FOR THRUST BLOCKS SHALL BE NO LONGER THAN THE RATIO OF 2 1/2 : 5 1/2 AND SHALL HAVE A MINIMUM COMPRESSION STRENGTH OF 2000 PSI (SO THAT FLANGES AND BOLTS ARE ACCESSIBLE.)

BEARING AREAS OF THRUST BLOCKS (BEARING AREA IN SQUARE FT.)				
PIPE SIZE INCHES	1/4 BEND	1/8 BEND	1/16 BEND OR LESS	PLUG TEES
6 AND 8	8	8	8	8
10 AND 12	22	13	8	16

TYPICAL THRUST BLOCK DETAIL

NOT TO SCALE

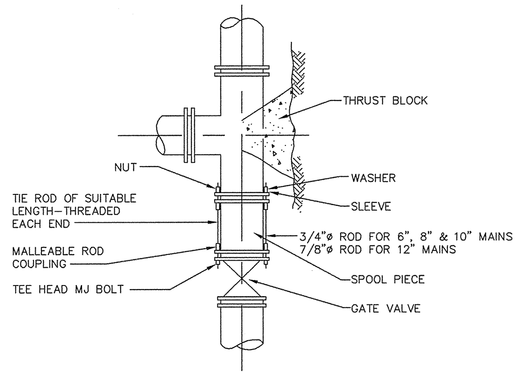

TYPICAL TIED MECHANICAL JOINT VALVE CONNECTION DETAILS

NOT TO SCALE

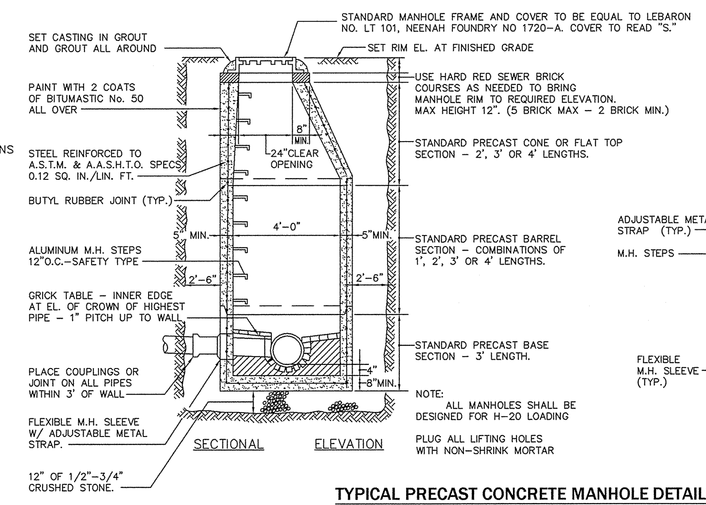

TYPICAL PRECAST CONCRETE MANHOLE DETAILS

N.T.S.

GENERAL SEWER NOTES:
1. GRAVITY SEWER MAIN SHALL BE 8–INCH SDR–35 PVC OR APPROVED EQUAL.
2. SEWERS SHOULD BE KEPT REMOTE FROM PUBLIC WATER SUPPLY WELLS OR OTHER POTABLE WATER SUPPLY SOURCES AND STRUCTURES. WHEREVER FEASIBLE, SEWERS SHOULD BE LAID AT A MINIMUM OF 10 FEET, HORIZONTALLY, FROM ANY EXISTING OR PROPOSED WATER MAIN. SHOULD LOCAL CONDITIONS PREVENT A LATERAL SEPARATION OF 10 FEET TO A WATER MAIN THE WATER MAIN SHOULD BE LAID IN A SEPARATE TRENCH AND THE ELEVATION OF THE CROWN OF THE SEWER PLACED AT LEAST 18" BELOW THE INVERT OF THE WATER MAIN.
3. WHEREVER SEWER MUST CROSS UNDER WATER MAINS, THE SEWER SHOULD BE LAID AT SUCH AN ELEVATION THAT THE CROWN OF THE SEWER IS AT LEAST 18 INCHES BELOW THE INVERT OF THE WATER MAIN. WHEN THE ELEVATION OF THE SEWER CANNOT BE VARIED TO MEET THIS REQUIREMENT, THE WATER MAIN SHOULD BE RELOCATED TO PROVIDE THIS SEPARATION OR CONSTRUCTED WITH MECHANICAL JOINT PIPE FOR A DISTANCE OF 10 FEET ON EACH SIDE OF THE SEWER. ONE FULL LENGTH OF WATER MAIN SHOULD BE CENTERED OVER THE SEWER SO THAT BOTH JOINTS WILL BE AS FAR FROM THE SEWER AS POSSIBLE.
4. ALL EXISTING SEWER LINES TO BE UTILIZED SHALL BE TELEVISION INSPECTED FOR INTEGRITY BEFORE RE–USE. THE TOWN ENGINEERING DIVISION SHALL BE NOTIFIED OF ALL INSPECTIONS 36 HOURS IN ADVANCE. LINES DEEMED UNSUITABLE FOR RE–USE SHALL BE REPLACED IN THEIR ENTIRETY.
5. ALL MANHOLE COVERS SHALL BE TOWN STANDARD COVERS

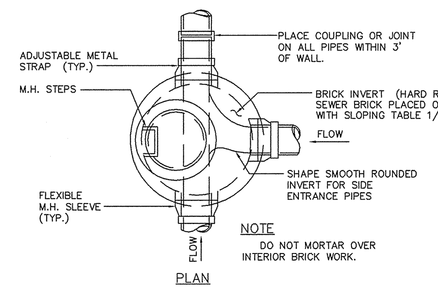

NOTE
DO NOT MORTAR OVER INTERIOR BRICK WORK.

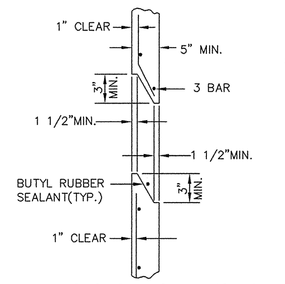

PRECAST STRUCTURE JOINT

N.T.S.

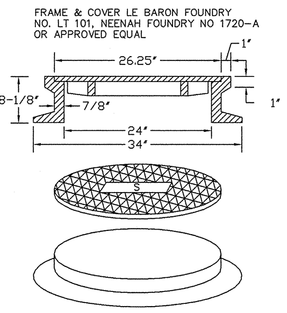

SEWER MANHOLE FRAME & COVER

N.T.S.

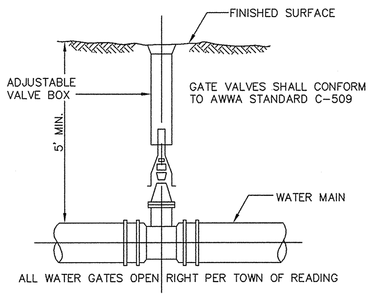

TYPICAL GATE VALVE

NOT TO SCALE

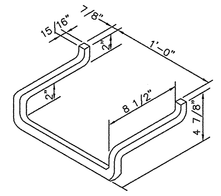

MANHOLE STEP DETAILS

N.T.S.

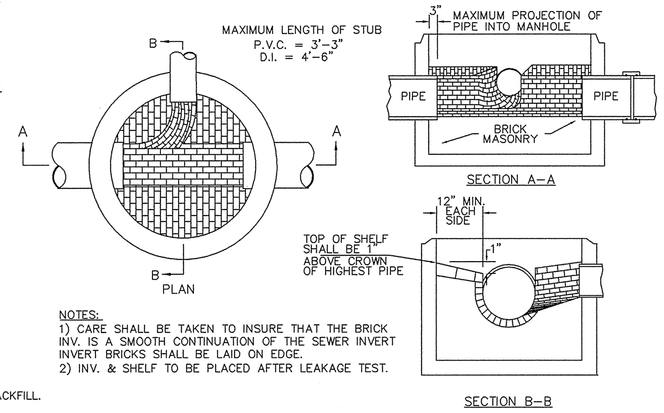

NOTES:
1) CARE SHALL BE TAKEN TO INSURE THAT THE BRICK INV. IS A SMOOTH CONTINUATION OF THE SEWER INVERT INVERT BRICKS SHALL BE LAID ON EDGE.
2) INV. & SHELF TO BE PLACED AFTER LEAKAGE TEST.

BRICK INVERT AT SEWER MANHOLE

N.T.S.

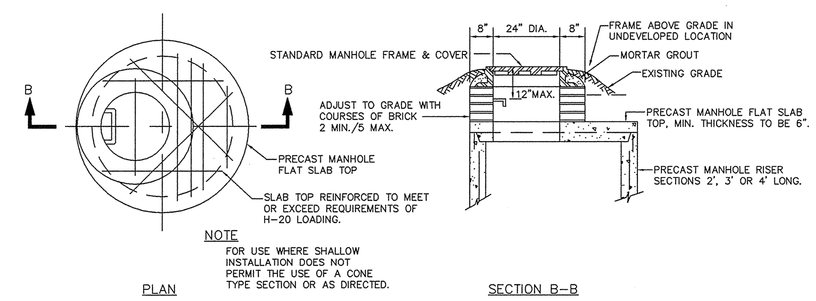

NOTE
FOR USE WHERE SHALLOW INSTALLATION DOES NOT PERMIT THE USE OF A CONE TYPE SECTION OR AS DIRECTED.

FLAT TOP SECTION

N.T.S.

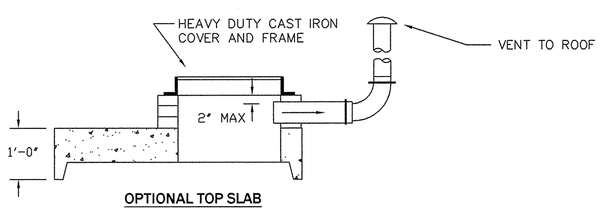

OPTIONAL TOP SLAB

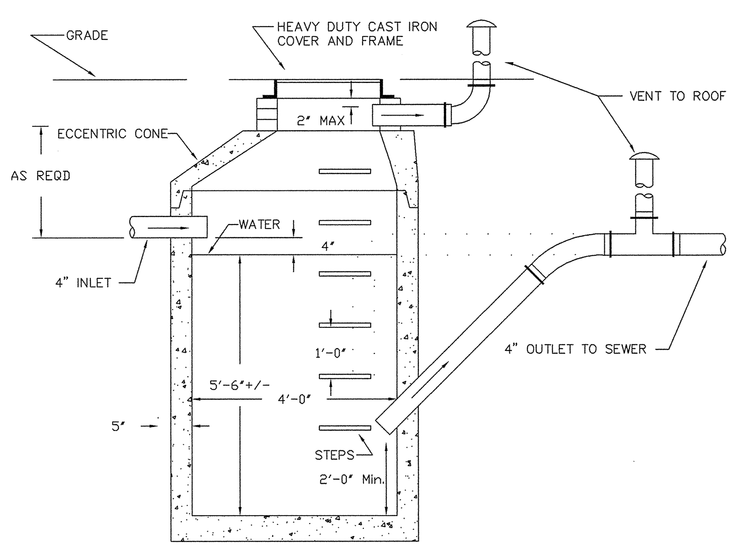

SECTION VIEW

NOTES:
1. CONCRETE: 4,000 PSI MINIMUM AFTER 28 DAYS.
2. MANHOLE DESIGN SPECIFICATIONS CONFORM TO LATEST ASTM C478 SPEC FOR "PRECAST REINFORCED CONCRETE MANHOLE SECTIONS."
3. BUTYL RESIN SECTION JOINT CONFORMS TO LATEST ASTM C443 SPEC.
4. STEEL REINFORCED COPOLYMER POLYPROPYLENE PLASTIC STEP CONFORMS TO LATEST ASTM C478 SPEC.
5. PIPE NOT SUPPLIED.
6. CONE SECTION AVAILABLE IN 4'–0" I.D. ONLY.

OIL AND GREASE SEPARATOR

NOT TO SCALE

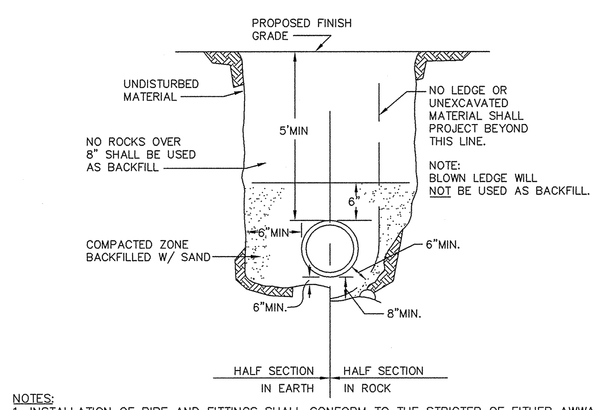

NOTES:
1. INSTALLATION OF PIPE AND FITTINGS SHALL CONFORM TO THE STRICTER OF EITHER AWWA STANDARDS OR MANUFACTURER'S RECOMMENDED INSTALLATION PROCEDURES.
2. PROVIDE AT LEAST ONE IMPERVIOUS DAM IN GRAVEL EVERY 200 FT AND AT ALL JUNCTIONS (ONE ON EACH LEG OF THE JUNCTION) – SEE DETAIL.
3. BEDDING AND BACKFILL SHOWN ON THIS DETAIL REPRESENT MINIMUM REQUIREMENTS AND SHALL BE ADJUSTED IF NECESSARY TO MEET PIPE MANUFACTURER'S REQUIREMENTS.

WATER MAIN TRENCH DETAIL

NOT TO SCALE

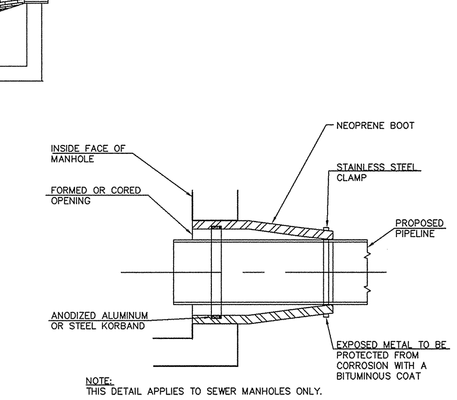

NOTE:
THIS DETAIL APPLIES TO SEWER MANHOLES ONLY.

PIPE CONNECTION DETAIL

N.T.S.

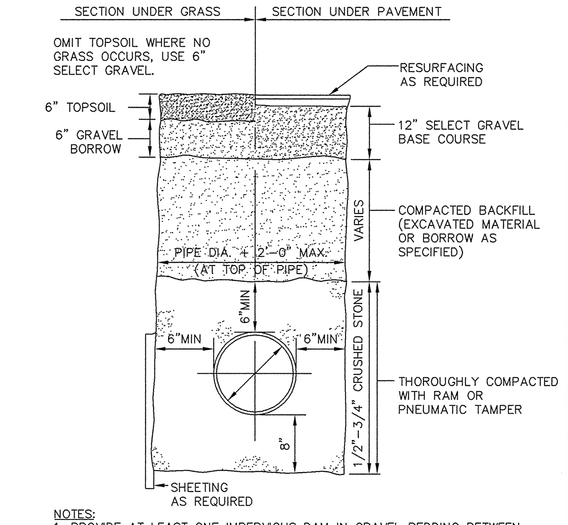

NOTES:
1. PROVIDE AT LEAST ONE IMPERVIOUS DAM IN GRAVEL BEDDING BETWEEN EACH MANHOLE OR EVERY 200 FT, WHICHEVER IS LESS (SEE DETAIL).
2. PROVIDE INSULATION AROUND PIPE WHERE COVER IS LESS THAN 3 FEET.

TYPICAL SEWER TRENCH DETAIL

N.T.S.

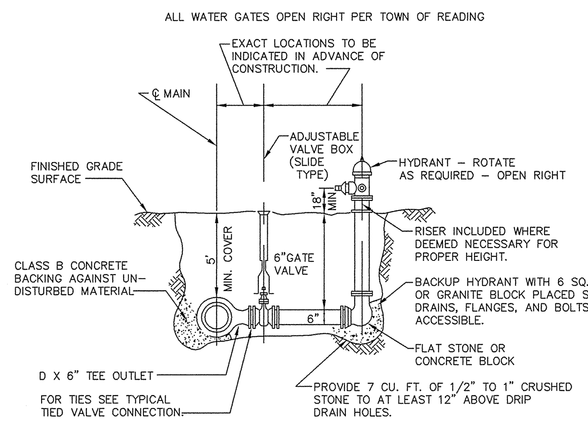

TYPICAL HYDRANT ASSEMBLY DETAIL

NOT TO SCALE

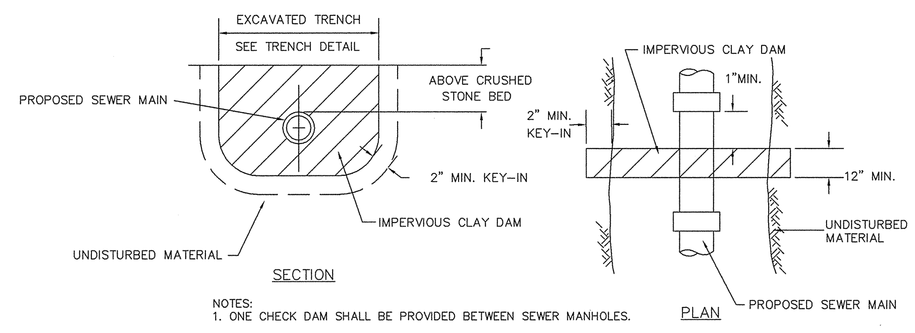

NOTES:
1. ONE CHECK DAM SHALL BE PROVIDED BETWEEN SEWER MANHOLES.

SEWER PIPE TRENCH (CHECK) DAM DETAIL

NOT TO SCALE

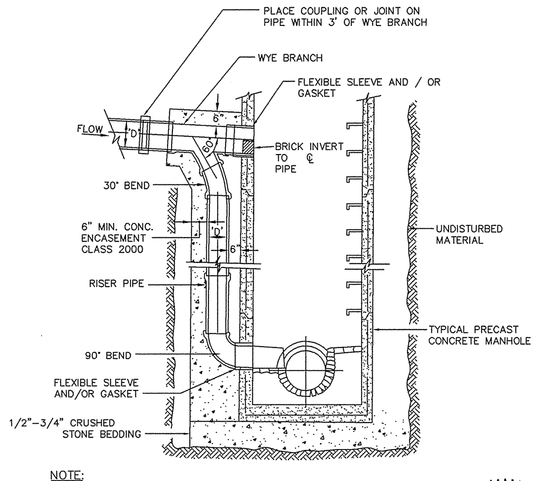

NOTE:
DROP MANHOLES INDICATED AS SUCH ON PLANS.

TYPICAL DROP INLET MANHOLE DETAILS

N.T.S.

GENERAL WATER NOTES
1. PIPE, FITTINGS, VALVES, JOINTS/PACKING AND FIRE HYDRANTS SHALL CONFORM TO THE TOWN OF READING SPECIFICATIONS. ALL HYDRANTS AND WATER GATE VALVES SHALL OPEN RIGHT.
2. WATER MAINS SHALL BE CEMENT LINED DUCTILE IRON (CLDI), CLASS 52 OR APPROVED EQUAL, 8" DIAMETER UNLESS OTHERWISE NOTED (GASKETED PUSH–ON OR MECHANICAL JOINTS).
3. INSTALLATION OF PIPE AND FITTINGS SHALL CONFORM TO THE STRICTER OF TOWN OF READING STADARDS, AWWA STANDARDS OR MANUFACTURER'S RECOMMENDED INSTALLATION PROCEDURES. ALL WATER MAIN CONSTRUCTION SHALL BE DONE UNDER THE SUPERVISION OF THE DEPARTMENT OF PUBLIC WORKS WATER & SEWER DIVISION.
4. A MINIMUM OF 5 FEET OF COVER SHALL BE MAINTAINED OVER WATER MAIN.
5. THE INSTALLED WATER MAINS SHALL BE PRESSURE TESTED AND LEAK TESTED IN ACCORDANCE WITH AWWA STANDARDS.
6. THE INSTALLED WATER MAINS SHALL BE DISINFECTED IN ACCORDANCE WITH AWWA STANDARDS.
7. THE PROJECT SHALL COMPLY WITH APPLICABLE CROSS–CONNECTION REQUIREMENTS OF THE TOWN OF READING AND THE MASSACHUSETTS DEPARTMENT OF ENVIRONMENTAL PROTECTION.

© 2011 MARCHIONDA & ASSOCIATES, L.P.

REGISTRY USE ONLY

APPROVED BY THE TOWN OF READING PLANNING BOARD — DATE

DRW:	DSG:	CHK:	REV	DESCRIPTION	DATE
			5	MISC. REVISIONS	6/17/11
			4	ENGINEERING COMMENTS	3/14/11
			3	CON. COM. REVISIONS	3/9/11
			2	CPDC COMMENTS	2/15/11
			1	CON. COM. REVISIONS	2/8/11

DETAIL SHEET

READING WOODS
in
READING, MA
Prepared For
PULTE HOMES OF NEW ENGLAND, L.L.C.
115 FLANDERS ROAD
WESTBORO, MA 01581

Marchionda & Associates, L.P.
Engineering and Planning Consultants
62 Montvale Avenue
Suite 1
Stoneham, MA 02180
TEL: (781) 438–6121
FAX: (781) 438–9654
Email: engineering@marchionda.com
Website: www.marchionda.com

COMMONWEALTH OF MASSACHUSETTS — PAUL A. MARCHIONDA — CIVIL — No. 30015 — REGISTERED PROFESSIONAL ENGINEER

6-7-11

DATE: 1/4/11
H:\PROJECTS\487–187\PLANS\PS\6–2011\DETAILS.DWG
M. & A. NO.: 487–187 | SCALE: NOT TO SCALE
SHEET 24 OF 36