ARTIS SENIOR LIVING
#1090 & 1100 MAIN STREET
READING, MA

Applicant:

Artis Senior Living, LLC
1651 Old Meadow Road
Suite 100
McLean, VA 22101

Engineer:

Hayes Engineering, Inc.
603 Salem Street
Wakefield, MA 01880
Ph: 781.246.2800
Fax:781.246.7596
www.hayeseng.com

Architect:

David L. Hoffman, FAIA

Landscape Architect:

James Emmanuel, RLA LEED AP
james k. emmanuel | associates
LANDSCAPE ARCHITECTS

22 Carlton Rd.
Marblehead, MA 01945
Tel. 781.622.7487
www.jamesemmanuel.com
james@jamesemmanuel.com

Law Offices:

Latham Law Offices LLC
643 Main Street
Reading, MA 01867
telephone 1-781-942-4400
FAX 1-781-944-7079

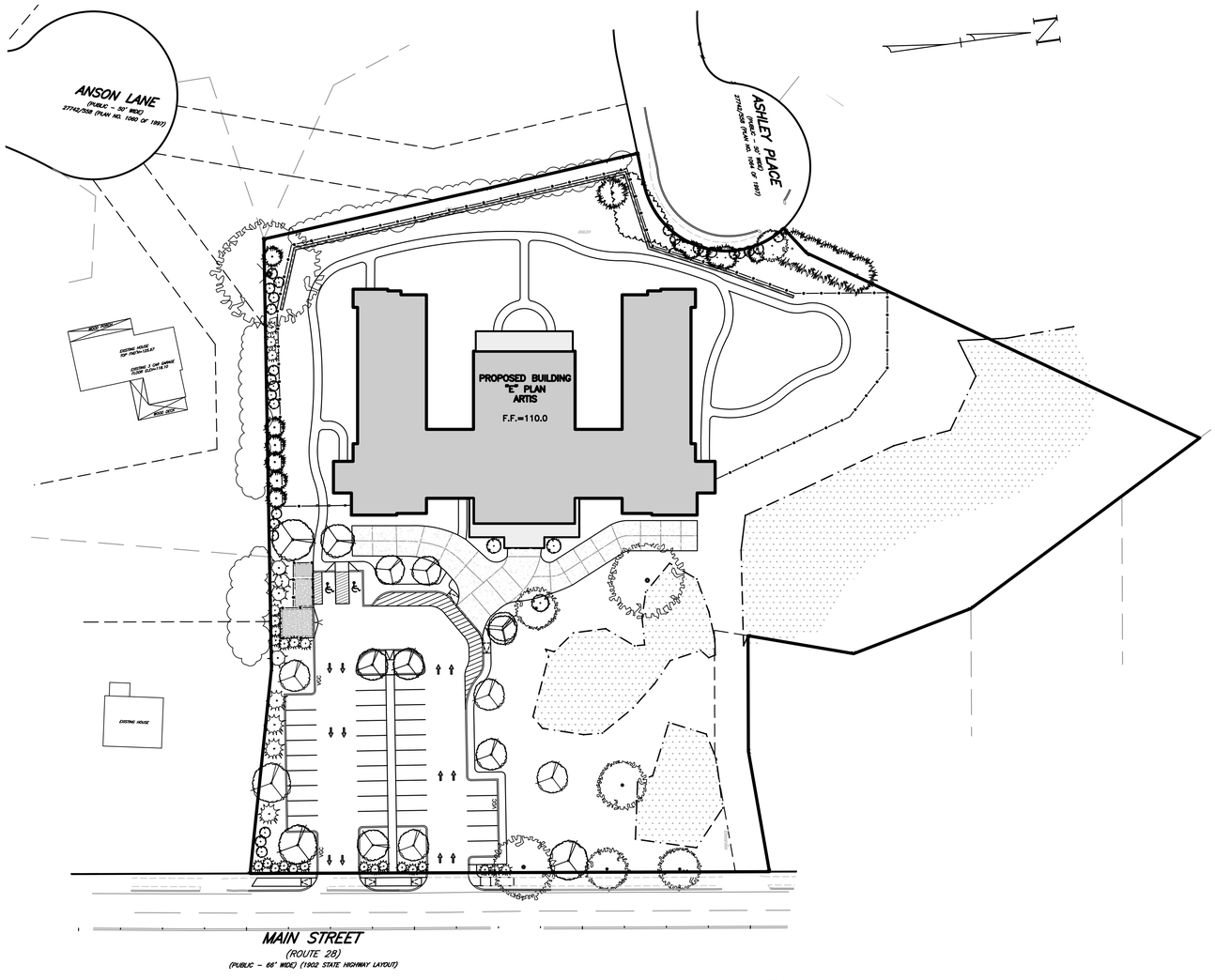

SCALE: 1"=40'

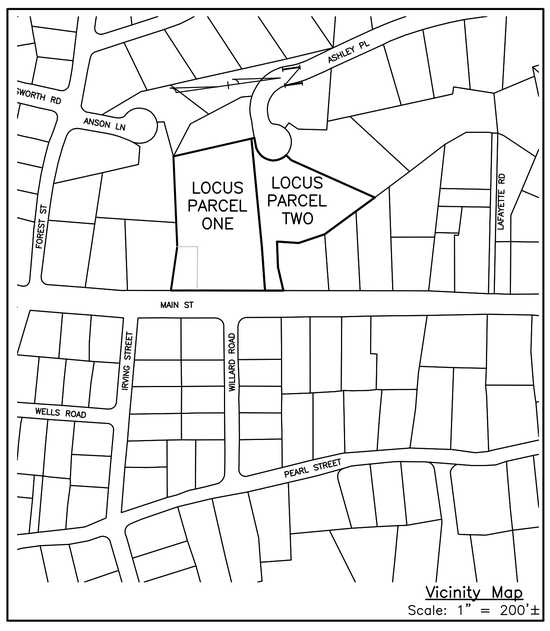

Vicinity Map
Scale: 1" = 200'±

THE GODDARD FAMILY TRUST

PARCEL 145
17742/202
[LOTS 10 & 3C ON PLAN NO. 1366 OF 1983]
ASSESSOR MAP 39 PARCEL 145
#1090 MAIN STREET
TOTAL PARCEL AREA
93,268 S.F.
2.141 ACRES

PARCEL 140
25142/137
[LOT 22 ON PLAN NO. 1129 OF 1994]
ASSESSOR MAP 39 PARCEL 140
#1100 MAIN STREET
TOTAL PARCEL AREA
61,165 S.F. (CALC) 1.404 ACRES
61,220 S.F. (RECORD) 1.405 ACRES

NOTE: PARCELS 140 & 145 ARE BEING COMBINED INTO ONE LOT, WHICH WILL CONTAIN 3.55± ACRES.

Prepared For:

Owner / Applicant

Owner: The Goddard Family Trust
Applicant: Artis Senior Living, LLC
1651 Old Meadow Road
Suite 100
McLean, VA 22101

SITE PLAN CONTENTS

C–1	COVER SHEET	(Sheet 1 of 8)
C–2	EXISTING CONDITIONS PLAN	(Sheet 2 of 8)
C–3	SITE PLAN	(Sheet 3 of 8)
C–3.1	SITE LAYOUT PLAN	(Sheet 4 of 9)
C–4	DETAIL SHEET	(Sheet 5 of 9)
C–5	DETAIL SHEET	(Sheet 6 of 9)
C–6	LIGHTING PLAN	(Sheet 7 of 9)
C–6.1	LIGHTING DETAILS	(Sheet 8 of 9)
C–7	LANDSACAPE PLAN	(Sheet 9 of 9)

Prepared By:

Hayes Engineering, Inc.
603 Salem Street
Wakefield, MA 01880
Ph: 781.246.2800
Fax: 781.246.7596
www.hayeseng.com

Design By: PJO
Drawn By: JST
Checked By: PJO
Project File: REA–0387
Comp. No: REA161

- ☐ Issued For Permit
- ☐ Issued For Review
- ☐ Issued For Bid
- ☐ Issued For Construction
- ☐ Not For Construction

No.	Revision	Date
1	Town Planner Comments	5/21

Scale: 1"=30'
0' 15' 30' 60'

Date: May 23, 2013

Drawing Title:

COVER SHEET
ARTIS SENIOR LIVING
#1090 & 1100 MAIN STREET
READING, MASS.

Seal:

Drawing No.:

C–1

SHEET 1 OF 9

N:\REA161\SP1100main_R0.dwg, 6/3/2013 3:49:25 PM, JST

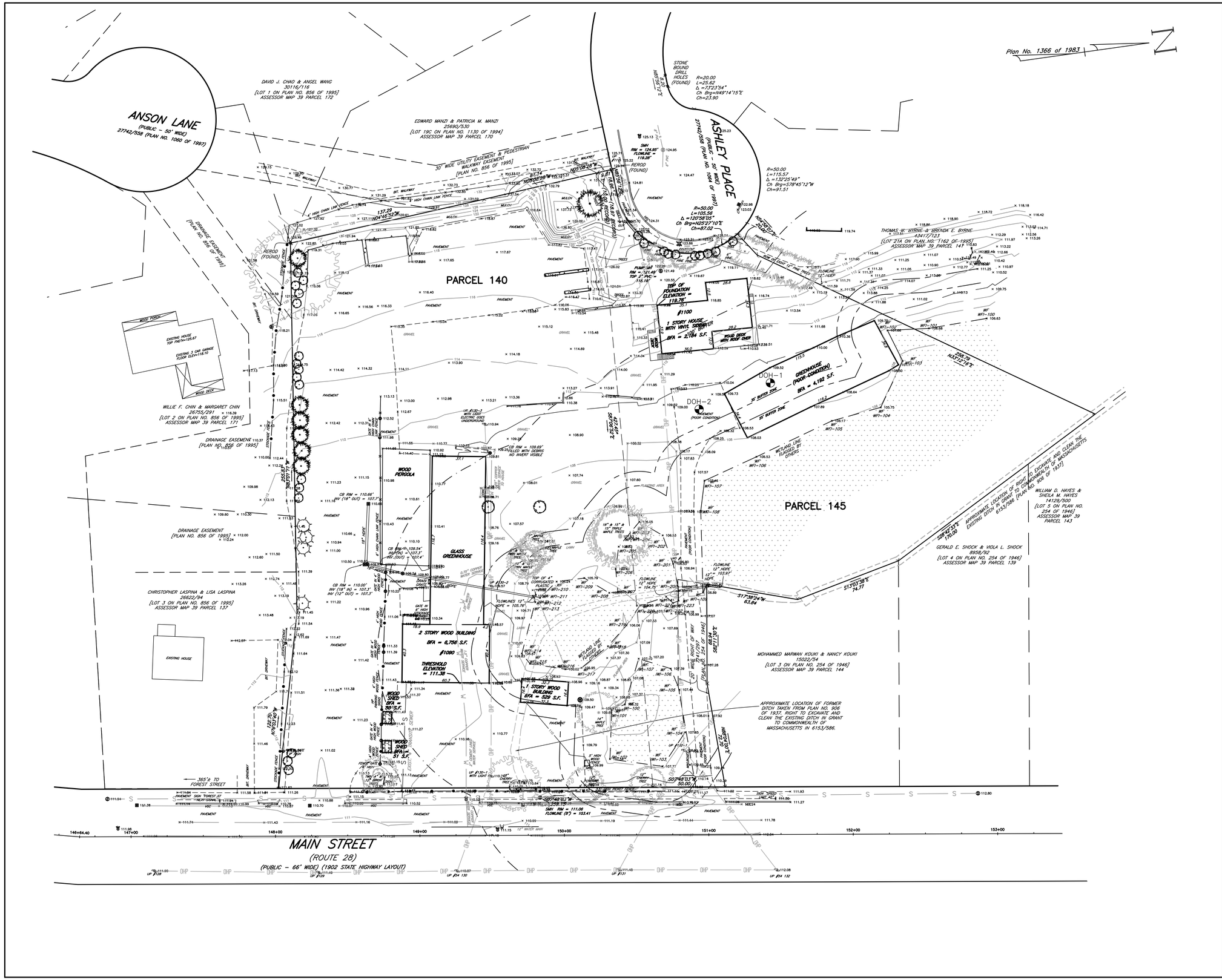

THE GODDARD FAMILY TRUST

PARCEL 145
17742/202
[LOTS 10 & 3C ON PLAN NO. 1366 OF 1983]
ASSESSOR MAP 39 PARCEL 145
#1090 MAIN STREET

TOTAL PARCEL AREA
93,268 S.F.
2.141 ACRES

PARCEL 140
25142/137
[LOT 22 ON PLAN NO. 1129 OF 1994]
ASSESSOR MAP 39 PARCEL 140
#1100 MAIN STREET

TOTAL PARCEL AREA
61,165 S.F. (CALC) 1.404 ACRES
61,220 S.F. (RECORD) 1.405 ACRES

NOTES:

1. VERIFY UTILITY LOCATIONS PRIOR TO CONSTRUCTION. CONSULT DIGSAFE PRIOR TO CONSTRUCTION.
2. SITE REQUIRES A MASS HIGHWAY ACCESS PERMIT PRIOR TO CONSTRUCTION.
3. GUARDS ARE TO BE PROVIDED FOR PROPOSED RETAINING WALLS PER BUILDING CODE (780 CMR: 1825.5).
4. EXISTING SEWER SERVICES NOT UTILIZED SHALL BE CAPPED AND PLUGGED AS DIRECTED BY THE WATER AND SEWER SUPERINTENDENT.
5. SITE SUBJECT TO NPDES PERMIT PRIOR TO SITE CONSTRUCTION.
6. ENGINEERING DIVISION SHALL BE NOTIFIED 72 HOURS IN ADVANCE TO MARK OUT TOWN UTILITIES.
7. ALL UTILITIES, STRUCTURES FRAMES & COVERS SHALL BE OF TOWN OF READING STANDARDS.
8. ALL WATER & SEWER SERVICES AND CONNECTIONS SHALL BE IN ACCORDANCE WITH TOWN OF READING STANDARDS.
9. ALL ABANDONED WATER & SEWER SERVICES SHALL BE DISCONNECTED AT THE MAIN.
10. ALL PROPOSED UTILITIES SHALL BE APPROVED BY APPROPRIATE UTILITY COMPANY AND SHALL CONFORM TO THEIR REQUIRED STANDARDS.
12. THE ENGINEER SHALL BE INFORMED OF ANY DISCREPANCIES AND/OR PLAN CHANGES THAT MAY BE NEEDED PRIOR ANY FURTHER CONSTRUCTION ACTIVITIES.
13. VERIFY ROOF DRAIN LOCATIONS AND LAYOUT WITH ARCHITECTURAL PLANS PRIOR TO INSTALLATION /CONSTRUCTION.
14. VERIFY FLOOR DRAIN LOCATIONS AND LAYOUT WITH ARCHITECTURAL PLANS PRIOR TO INSTALLATION /CONSTRUCTION.
15. SEE ARCHITECT PLANS FOR ELEC. FROM BUILDING FOR LIGHTING.
16. PRIOR TO INSTALLING FLOOR DRAINS, VERIFY COLUMN LOCATIONS.
17. PARCELS 140 & 145 ARE BEING COMBINED INTO ONE LOT, WHICH WILL CONTAIN 3.55± ACRES.

LEGEND:

- CATCH BASIN
- CATCH BASIN ROUND
- HYDRANT
- WATER SHUTOFF
- WATER GATE
- SEWER MANHOLE
- UTILITY POLE
- SIGN

BIT BERM – BITUMINOUS CONCRETE CURB
BFA – BUILDING FOOTPRINT AREA
VGC – VERTICAL GRANITE CURB
CONC – CONCRETE
WF – WETLAND FLAG
EDGE OF PAVEMENT
RETAINING WALL

Seal:

Prepared For:

Owner / Applicant
Owner: The Goddard Family Trust
Applicant: Artis Senior Living, LLC
1651 Old Meadow Road
Suite 100
McLean, VA 22101

Prepared By:

Hayes Engineering, Inc.
603 Salem Street
Wakefield, MA 01880
Phone: 781.246.7900
Fax: 781.246.7596
www.hayesengg.com

Design By: PJO
Drawn By: JST
Checked By: PJO
Project File: REA-0387
Comp. No: REA161

- ☐ Issued For Permit
- ☐ Issued For Review
- ☐ Issued For Bid
- ☐ Issued For Construction
- ☐ Not For Construction

No.	Revision	Date
1	Town Planner Comments	5/31/2013
2		
3		
4		
5		
6		
7		
8		
9		
10		

Scale: 1"=30'
0' 15' 30' 60'

Date: May 23, 2013

Drawing Title:

EXISTING CONDITIONS PLAN
ARTIS SENIOR LIVING
#1090 & 1100 MAIN STREET
READING, MASS.

Drawing No.:

C-2

SHEET 2 OF 9

N:\REA161\SP1100main_R8.dwg, 6/3/2013 3:49:49 PM, JST

NOTES:

1. VERIFY UTILITY LOCATIONS PRIOR TO CONSTRUCTION. CONSULT DIGSAFE PRIOR TO CONSTRUCTION.
2. SITE REQUIRES A MASS HIGHWAY ACCESS PERMIT PRIOR TO CONSTRUCTION.
3. GUARDS ARE TO BE PROVIDED FOR PROPOSED RETAINING WALLS PER BUILDING CODE (780 CMR: 1825.5).
4. EXISTING SEWER SERVICES NOT UTILIZED SHALL BE CAPPED AND PLUGGED AS DIRECTED BY THE WATER AND SEWER SUPERINTENDENT.
5. SITE SUBJECT TO NPDES PERMIT PRIOR TO SITE CONSTRUCTION.
6. ENGINEERING DIVISION SHALL BE NOTIFIED 72 HOURS IN ADVANCE TO MARK OUT TOWN UTILITIES.
7. ALL UTILITIES, STRUCTURES FRAMES & COVERS SHALL BE OF TOWN OF READING STANDARDS.
8. ALL WATER & SEWER SERVICES AND CONNECTIONS SHALL BE IN ACCORDANCE WITH TOWN OF READING STANDARDS.
9. ALL ABANDONED WATER & SEWER SERVICES SHALL BE DISCONNECTED AT THE MAIN.
10. ALL PROPOSED UTILITIES SHALL BE APPROVED BY APPROPRIATE UTILITY COMPANY AND SHALL CONFORM TO THEIR REQUIRED STANDARDS.
12. THE ENGINEER SHALL BE INFORMED OF ANY DISCREPANCIES AND/OR PLAN CHANGES THAT MAY BE NEEDED PRIOR ANY FURTHER CONSTRUCTION ACTIVITIES.
13. VERIFY ROOF DRAIN LOCATIONS AND LAYOUT WITH ARCHITECTURAL PLANS PRIOR TO INSTALLATION /CONSTRUCTION.
14. VERIFY PROPOSED UTILITY SERVICES WITH MEP PLAN PRIOR TO CONSTRUCTION.
15. SEE ARCHITECT PLANS FOR ELEC. FROM BUILDING FOR LIGHTING.
16. PRIOR TO INSTALLING FLOOR DRAINS, VERIFY COLUMN LOCATIONS.
17. PARCELS 140 & 145 ARE BEING COMBINED INTO ONE LOT, WHICH WILL CONTAIN 3.55± ACRES.
18. THE PROPOSED STRUCTURE (ARTIS) IS AT LEAST 80' FROM THE NEAREST DWELLING.

LEGEND:

- CATCH BASIN
- CATCH BASIN ROUND
- HYDRANT
- WATER SHUTOFF
- WATER GATE
- SEWER MANHOLE
- UTILITY POLE
- SIGN
- BIT BERM – BITUMINOUS CONCRETE CURB
- BFA – BUILDING FOOTPRINT AREA
- VGC – VERTICAL GRANITE CURB
- CONC – CONCRETE
- WF – WETLAND FLAG
- EDGE OF PAVEMENT
- RETAINING WALL

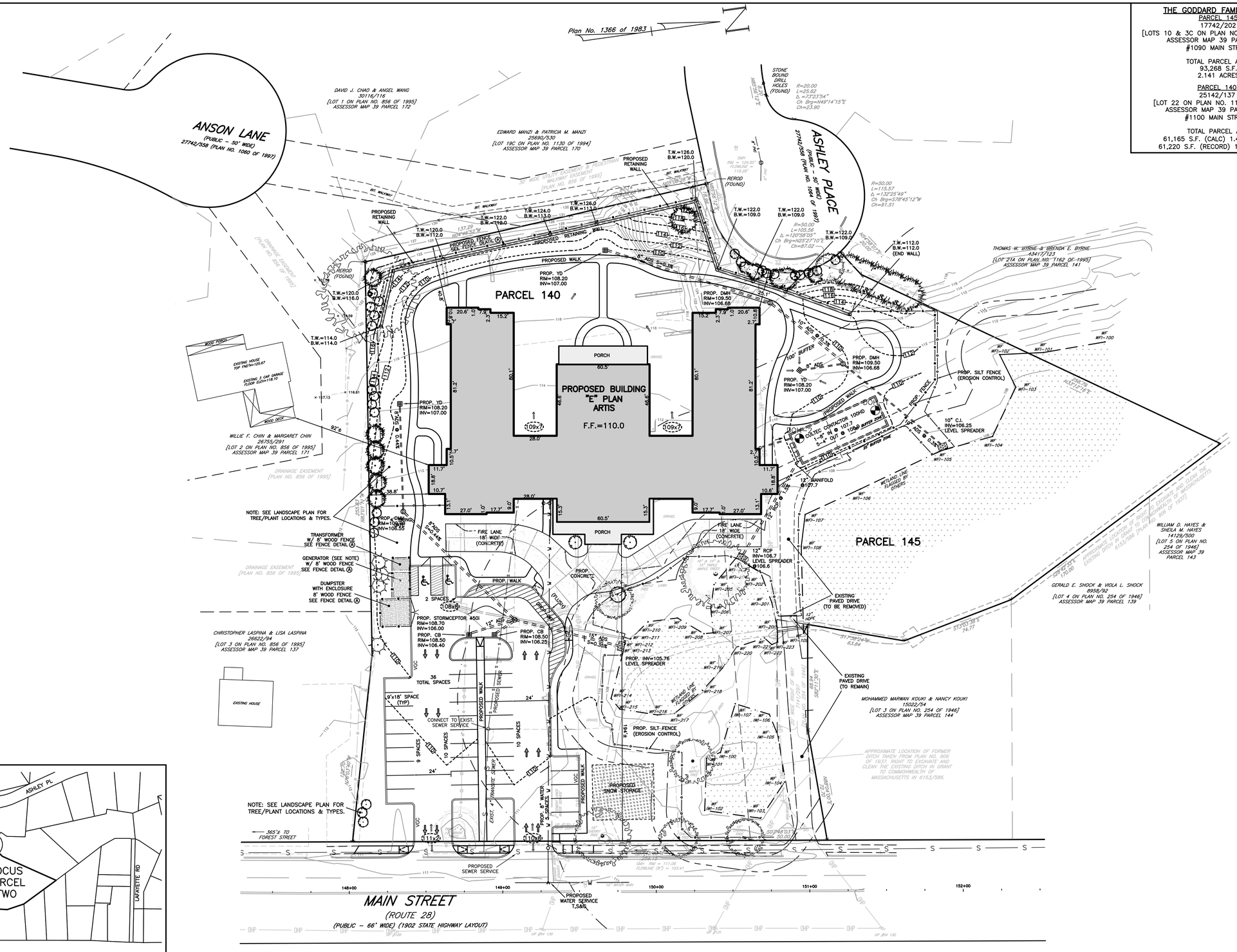

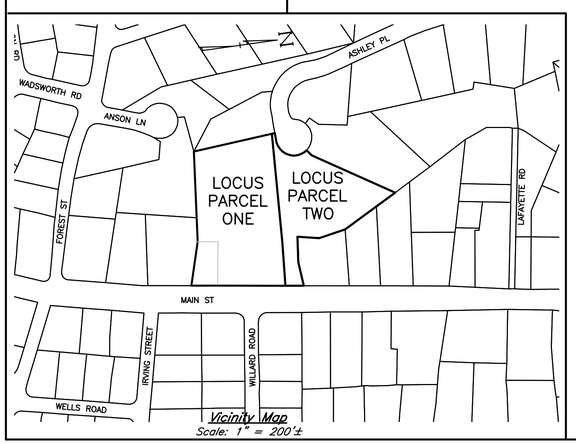

Vicinity Map
Scale: 1" = 200'±

THE GODDARD FAMILY TRUST

PARCEL 145
17742/202
[LOTS 10 & 3C ON PLAN NO. 1366 OF 1983]
ASSESSOR MAP 39 PARCEL 145
#1090 MAIN STREET

TOTAL PARCEL AREA
93,268 S.F.
2.141 ACRES

PARCEL 140
25142/137
[LOT 22 ON PLAN NO. 1129 OF 1994]
ASSESSOR MAP 39 PARCEL 140
#1100 MAIN STREET

TOTAL PARCEL AREA
61,165 S.F. (CALC) 1.404 ACRES
61,220 S.F. (RECORD) 1.405 ACRES

Prepared For:

Owner / Applicant
Owner: The Goddard Family Trust
Applicant: Artis Senior Living, LLC
1651 Old Meadow Road
Suite 100
McLean, VA 22101

Prepared By:

Hayes Engineering, Inc.
603 Salem Street
Wakefield, MA 01880
Phone: 781.246.7200
Fax: 781.246.7596
www.hayesengg.com

Design By: PJO
Drawn By: JST
Checked By: PJO
Project File: REA-0387
Comp. No: REA161
☐ Issued For Permit
☐ Issued For Review
☐ Issued For Bid
☐ Issued For Construction
☐ Not For Construction

No.	Revision	Date
1	Town Planner Comments	5/31/2013
2		
3		
4		
5		
6		
7		
8		
9		
10		

Scale: 1"=30'
0' 15' 30' 60'

Date: May 23, 2013

Drawing Title:

SITE PLAN
ARTIS SENIOR LIVING
#1090 & 1100 MAIN STREET
READING, MASS.

Seal:

Drawing No.:

C-3

SHEET 3 OF 9

N:\REA161\SP1100main_R8.dwg, 6/3/2013 3:50:18 PM, JST

ZONING: NURSING HOME (4.3.1.4)

4.3.1.4 THE BOARD OF APPEALS MAY GRANT A SPECIAL PERMIT FOR A NURSING HOME IN A RESIDENCE S–20 ZONING DISTRICT, IF, AS A MINIMUM, THE FOLLOWING CONDITIONS ARE MET:

REQUIRED	PROVIDED
A. THE LOT(S) ON WHICH THE NURSING HOME IS TO BE LOCATED EITHER ABUTS OR IS PARTIALLY WITHIN A BUSINESS A DISTRICT, OR IS SEPARATED THEREFROM ONLY BY AN INTERSTATE HIGHWAY OR THE LOT(S) ON WHICH THE NURSING HOME IS TO BE LOCATED CURRENTLY HAS FRONTAGE ON A STATE HIGHWAY, AND THE PROPOSED DRIVEWAY TO THE SITE WILL BE WITHIN 600 FT OF A SIGNALIZED INTERSECTION. A LOT SHALL NOT BE CONSIDERED AS ABUTTING BUSINESS A DISTRICT UNLESS THAT LOT ACTUALLY, PHYSICALLY TOUCHES THE BUSINESS A DISTRICT, OR IS SEPARATED THEREFROM ONLY BY AN INTERSTATE HIGHWAY. A LOT ON THE OTHER SIDE OF OR SEPARATED BY A LOCAL STREET OR STATE HIGHWAY FROM A BUSINESS A DISTRICT SHALL NOT BE CONSIDERED TO "ABUT" THAT DISTRICT FOR THE PURPOSE OF THIS SECTION.	THE LOT HAS FRONTAGE ON A STATE HIGHWAY (MAIN STREET – RTE 28), AND THE PROPOSED DRIVEWAYS TO THE SITE IS 365'± OF THE SIGNALIZED INTERSECTION OF MAIN STREET & FOREST STREET/FOREST GLEN ROAD.
B. ANY STRUCTURE OR PARKING AREA SHALL BE LOCATED NOT CLOSER THAN TWENTY FIVE (25) FEET TO ANY PROPERTY LINE ABUTTING A RESIDENCE OR A LOCAL PUBLIC STREET.	THE BUILDING MEETS THE REQUIRED SEE ZONING BOARD OF
C. THE NURSING HOME STRUCTURE SHALL NOT BE LESS THAN EIGHTY (80) FEET FROM THE NEAREST DWELLING EXISTING AT THE TIME OF APPLICATION FOR THE SPECIAL PERMIT.	THE PROPOSED NURSING HOME STRUCTURE IS 92'± FROM THE EXISTING DWELLING (#11 ANSON LANE). SEE SHEET C3.
D. THE LOT SHALL BE NOT LESS THAN THREE (3) ACRES IN SIZE WITH NOT LESS THAN THREE HUNDRED(300) FEET OF FRONTAGE ON AN EXISTING PUBLIC WAY.	PARCELS 140 & 145 ARE BEING COMBINED INTO ONE LOT, WHICH WILL CONTAIN 3.55± ACRES. FRONTAGE PROVIDED = 309.15 FT
E. THE NURSING HOME SHALL BE TIED INTO MUNICIPAL WATER AND SEWER SERVICE WHEN CONSTRUCTED.	NURSING HOME WILL BE TIED INTO MUNICIPAL WATER AND SEWER SERVICE WHEN CONSTRUCTED. SEE SHEET C–3.
F. PRIOR TO MAKING APPLICATION TO THE BOARD OF APPEALS FOR A SPECIAL PERMIT FOR A NURSING HOME UNDER THIS SECTION, THE APPLICANT SHALL OBTAIN SITE PLAN APPROVAL FROM THE COMMUNITY PLANNING AND DEVELOPMENT COMMISSION PURSUANT TO SECTION 4.3.3 OF THESE BYLAW. THE COMMUNITY PLANNING AND DEVELOPMENT COMMISSION MAY APPROVE A SITE PLAN FOR AN ASSISTED LIVING RESIDENCE, OR FOR COMBINED NURSING AND ASSISTED LIVING RESIDENCE WHEN THE NUMBER OF ASSISTED LIVING UNITS EXCEEDS 10% OF THE COMBINED TOTAL NUMBER OF UNITS, ONLY UNDER THE FOLLOWING CONDITIONS THE GROSS FLOOR AREA OF THE RESIDENTS' LIVING SPACE EXCLUDING COMMON AREAS, SUCH AS BUT NOT LIMITED TO HALLWAYS, DINING ROOMS, OFFICES, RECREATION AREAS, MEDICAL ROOMS, EMPLOYEE ROOMS AND MECHANICAL SPACES SHALL NOT EXCEED 15% OF THE TOTAL LOT AREA. FOR PURPOSES OF THIS SECTION, TOTAL LOT AREA SHALL INCLUDE ANY LAND SHOWN ON THE SITE PLAN WHICH IS CONVEYED TO THE TOWN OF READING FOR NOMINAL CONSIDERATION.	RESIDENT ROOM AREAS, MINUS COMMON AREAS AND HALLS, ETC. TOTALS 13,600 SQUARE FEET. MAXIMUM ALLOWED= 23,196 (15%) PROVIDED = 13,600 (8.8%)
G. THE NURSING HOME SHALL MEET ALL APPLICABLE BUILDING CODE REQUIREMENTS AND SHALL HAVE PROPERLY INSTALLED AND MAINTAINED FIRE SAFETY DEVICES AND SHALL CONFORM TO ALL APPLICABLE LOCAL AND STATE REGULATIONS AND STATUTES FOR THE PROTECTION OF ALL OCCUPANTS IN THE NURSING HOME.	SEE ARCHITECTURAL PLANS PLANS TO BE APPROVED BY THE BUILDING INSPECTOR & FIRE DEPARTMENT PRIOR TO CONSTRUCTION.
H. SIDELINE PLANTING SHALL BE REQUIRED FOR ANY SIDELINE OF THE LOT WHICH ABUTS LAND BEING USED FOR RESIDENTIAL PURPOSES. THE SIDELINE PLANTING SHALL BE AT LEAST FIVE FEET WIDE, SHALL BE FREE OF ANY PAVING AND SHALL EXTEND FROM THE STREET LINE TO TWENTY FEET BEYOND THE DEEPEST POINT ON THE PREMISES HAVING BUILDINGS OR PARKING AREAS. THE FULL LENGTH OF THE PLANTING AREA SHALL BE PROVIDED WITH SCREENING THROUGH PLANTINGS AT LEAST FOUR FEET HIGH WHEN PLANTED. FENCING MAY BE USED IN CONJUNCTION WITH SUCH SCREENING.	SEE LANDSCAPE PLAN, SHEET C–7. PROPOSED SIDELINE PLANTINGS TO BE AT LEAST FIVE FEET WIDE. SIDELINE IS FREE OF ANY PAVING AND EXTENDS FROM THE STREET LINE TO TWENTY FEET BEYOND THE DEEPEST POINT (REAR LOT LINE) ON THE PREMISES. THE FULL LENGTH OF THE PLANTING AREA IS PROVIDED WITH SCREENING OF PLANTINGS AT LEAST FOUR FEET HIGH AND/OR AN 8' FENCE. SEE LANDSCAPE PLAN, SHEET C–7.
I. FRONT SCREENING SHALL BE PROVIDED BETWEEN THE BUILDING AND THE STREET LINE THROUGH A STAGGERED ROW OF TREES, EITHER PLANTED OR RETAINED, HAVING AT LEAST A TWO INCH TRUNK DIAMETER AND BEING OF SIZE, SPECIE AND SPACING SUCH THAT THE TREE CROWNS WILL APPROXIMATELY MEET EACH OTHER AT MATURITY. ALL TREES USED FOR FRONT SCREENING SHALL BE OF SPECIES COMMON TO THE AREA AND WHICH REACH AN ULTIMATE HEIGHT OF NOT LESS THAN THIRTY FEET.	FRONT SCREENING TO BE BETWEEN THE BUILDING AND THE STREET LINE THROUGH A STAGGERED ROW OF TREES, WHICH WILL BE PLANTED OR RETAINED, HAVING AT LEAST A TWO INCH TRUNK DIAMETER AND BEING OF SIZE. ALL TREES USED FOR FRONT SCREENING ARE OF SPECIES COMMON TO THE AREA AND WHICH REACH AN ULTIMATE HEIGHT OF NOT LESS THAN THIRTY FEET.
J. IF AT THE TIME OF APPLICATION FOR A SPECIAL PERMIT UNDER THIS PROVISION, THERE ARE ONE OR MORE SINGLE FAMILY DWELLINGS SITUATED ON THE LOT OR LOTS IMMEDIATELY ABUTTING AND TO THE REAR OF THE LOT UPON WHICH THE NURSING HOME IS PROPOSED, THE BOARD OF APPEALS MAY REQUIRE REASONABLE REAR LOT LINE PLANTINGS FOR SCREENING PURPOSES.	THE APPLICANT IS PROVIDING SCREENING BASED ON MEETINGS WITH ABUTTERS. SEE LANDSCAPE PLAN C–7.

PARKING AND LOADING

PARKING & LOADING	REQUIRED BY ZONING TABLE 6.1.1.7	PROVIDED
PARKING SPACES	22 SPACES REQUIRED (ONE FOR EACH THREE BEDS)	36 SPACES
LOADING SPACES	ONE FOR EVERY 70 BEDS	WAIVER REQUESTED

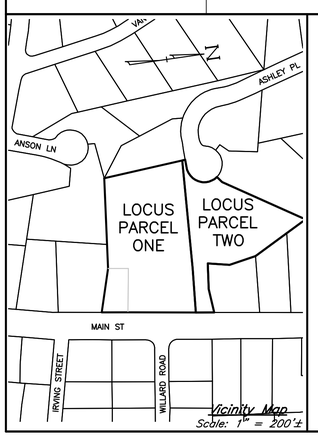

Vicinity Map
Scale: 1" = 200'±

LEGEND:

- CATCH BASIN
- CATCH BASIN ROUND
- HYDRANT
- WATER SHUTOFF
- WATER GATE
- SEWER MANHOLE
- UTILITY POLE
- SIGN
- BIT BERM – BITUMINOUS CONCRETE CURB
- BFA – BUILDING FOOTPRINT AREA
- VGC – VERTICAL GRANITE CURB
- CONC – CONCRETE
- WF – WETLAND FLAG
- EDGE OF PAVEMENT
- RETAINING WALL

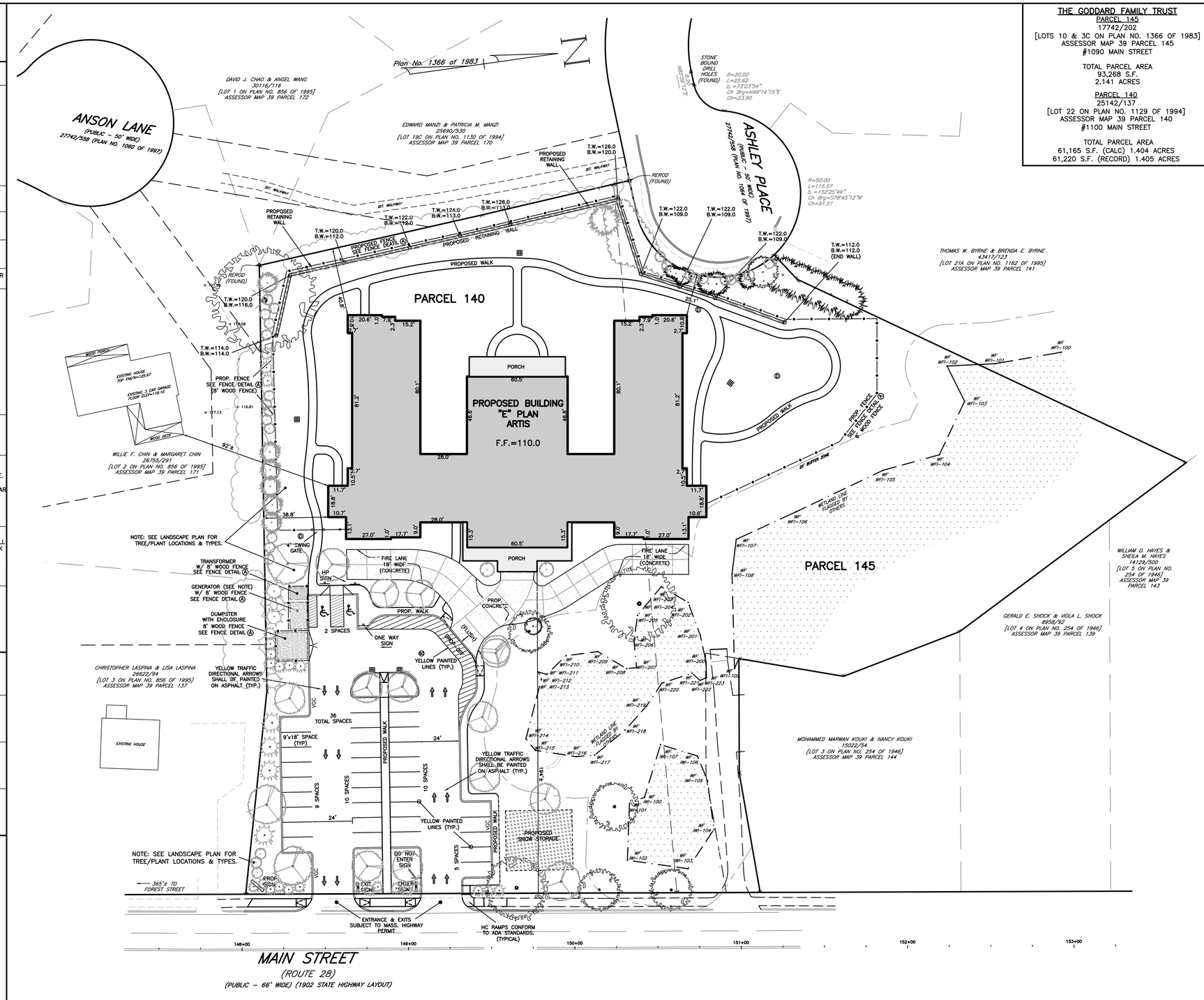

NOTE:

YELLOW TRAFFIC DIRECTIONAL ARROWS SHALL BE PAINTED ON ASPHALT.

THE PERIMETER FENCING SHALL BE A 7' HIGH WOODEN FENCE WITH 1' OF LATTICE ON TOP FOR A TOTAL FENCE HEIGHT OF 8'. SEE DETAIL ON SHEET C–4.

GENERATOR TESTING WILL BE DONE ONCE A WEEK FOR 20 MINUTES. MONDAY MORNINGS AT 9AM OR AT ANOTHER TIME IF REQUESTED BY THE NEIGHBORS.

THE GODDARD FAMILY TRUST
PARCEL 145
17742/202
[LOTS 10 & 3C ON PLAN NO. 1366 OF 1983]
ASSESSOR MAP 39 PARCEL 145
#1090 MAIN STREET

TOTAL PARCEL AREA
93,268 S.F.
2.141 ACRES

PARCEL 140
25142/137
[LOT 22 ON PLAN NO. 1129 OF 1994]
ASSESSOR MAP 39 PARCEL 140
#1100 MAIN STREET

TOTAL PARCEL AREA
61,165 S.F. (CALC) 1.404 ACRES
61,220 S.F. (RECORD) 1.405 ACRES

Prepared For:

Owner / Applicant
Owner: The Goddard Family Trust
Applicant: Artis Senior Living, LLC
1651 Old Meadow Road
Suite 100
McLean, VA 22101

Prepared By:

Hayes Engineering, Inc.
603 Salem Street
Wakefield, MA 01880
Phone: 781.246.7900
Fax: 781.246.7596
www.hayesengg.com

Design By: PJO
Drawn By: JST
Checked By: PJO
Project File: REA–0387
Comp. No: REA161
☐ Issued For Permit
☐ Issued For Review
☐ Issued For Bid
☐ Issued For Construction
☐ Not For Construction

No.	Revision	Date
1	Town Planner Comments	5/31/2013
2		
3		
4		
5		
6		
7		
8		
9		
10		

Scale: 1"=30'
0' 15' 30' 60'

Date: May 23, 2013

Drawing Title:

SITE LAYOUT PLAN
ARTIS SENIOR LIVING
#1090 & 1100 MAIN STREET
READING, MASS.

Seal:

Drawing No.:
C–3.1

SHEET 4 OF 9

N:\REA161\SP1100main_RR.dwg, 6/3/2013 3:50:56 PM, JST

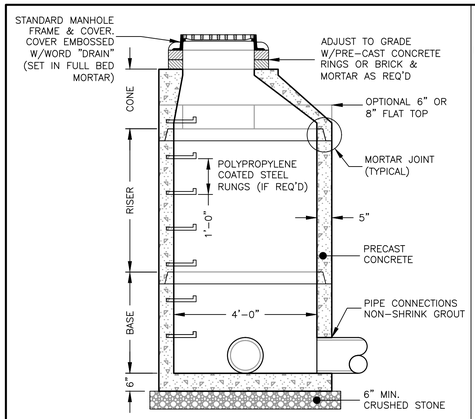

PRE-CAST DRAIN MANHOLE
NOT TO SCALE

NOTES:
1. CONCRETE: 4,000 PSI MINIMUM AFTER 28 DAYS.
2. REINFORCED STEEL CONFORMS TO LATEST ASTM A185 SPEC. 0.12 SQ. IN./LINEAL FT. AND 0.12 SQ. IN. (BOTH WAYS) BASE BOTTOM.
3. H-20 DESIGN LOADING PER AASHTO HS-20-44; ASTM C478 SPEC FOR "PRECAST REINFORCED CONCRETE MANHOLE SECTIONS."

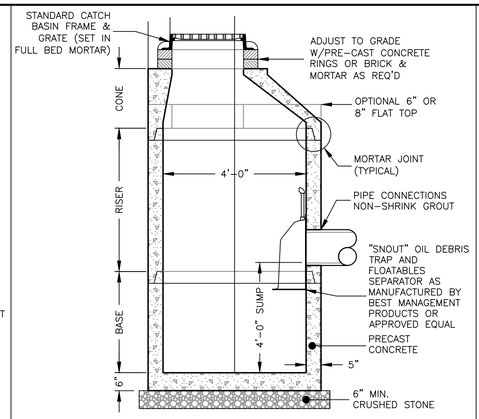

PRE-CAST CATCH BASIN
NOT TO SCALE

NOTES:
1. CONCRETE: 4,000 PSI MINIMUM AFTER 28 DAYS.
2. REINFORCED STEEL CONFORMS TO LATEST ASTM A185 SPEC. 0.12 SQ. IN./LINEAL FT. AND 0.12 SQ. IN. (BOTH WAYS) BASE BOTTOM.
3. H-20 DESIGN LOADING PER AASHTO HS-20-44; ASTM C478 SPEC FOR "PRECAST REINFORCED CONCRETE MANHOLE SECTIONS."

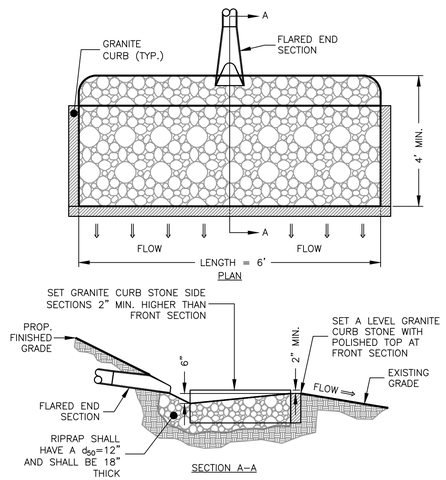

LEVEL SPREADER
NOT TO SCALE

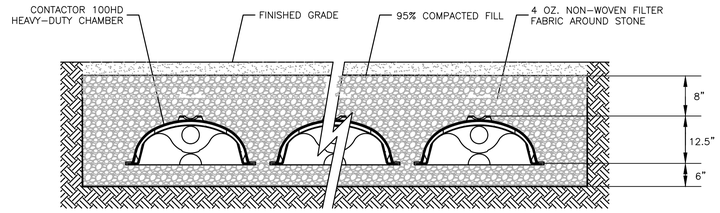

CONTACTOR 100HD BY CULTEC, INC. OF BROOKFIELD, CT. STORAGE PROVIDED = 3.84 CF/FT PER DESIGN UNIT. REFER TO CULTEC, INC.'S CURRENT RECOMMENDED INSTALLATION GUIDELINES. USE CONTACTOR 100HD HEAVY DUTY FOR TRAFFIC AND/OR H20 APPLICATIONS.

ALL CONTACTOR 100HD HEAVY DUTY UNITS ARE MARKED WITH A COLOR STRIPE FORMED INTO THE PART ALONG THE LENGTH OF THE CHAMBER. ALL CONTACTOR 100 CHAMBERS MUST BE INSTALLED IN ACCORDANCE WITH ALL APPLICABLE LOCAL, STATE AND FEDERAL REGULATIONS.

CULTEC – THE CONTACTOR® 100HD
NOT TO SCALE

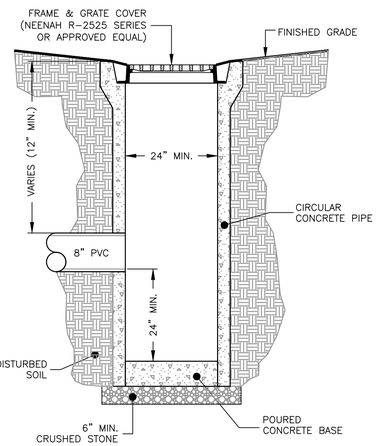

YARD DRAIN
NOT TO SCALE

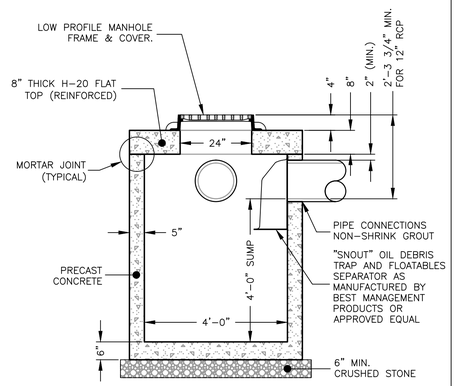

REDUCED COVER CATCH BASIN
NOT TO SCALE

NOTES:
1. CONCRETE: 4,000 PSI MINIMUM AFTER 28 DAYS.
2. REINFORCED STEEL CONFORMS TO LATEST ASTM A185 SPEC. 0.12 SQ. IN./LINEAL FT. AND 0.12 SQ. IN. (BOTH WAYS) BASE BOTTOM.
3. H-20 DESIGN LOADING PER AASHTO HS-20-44; ASTM C478 SPEC FOR "PRECAST REINFORCED CONCRETE MANHOLE SECTIONS."

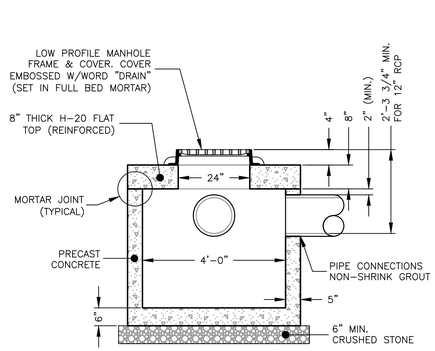

REDUCED COVER DRAIN MANHOLE
NOT TO SCALE

NOTES:
1. CONCRETE: 4,000 PSI MINIMUM AFTER 28 DAYS.
2. REINFORCED STEEL CONFORMS TO LATEST ASTM A185 SPEC. 0.12 SQ. IN./LINEAL FT. AND 0.12 SQ. IN. (BOTH WAYS) BASE BOTTOM.
3. H-20 DESIGN LOADING PER AASHTO HS-20-44; ASTM C478 SPEC FOR "PRECAST REINFORCED CONCRETE MANHOLE SECTIONS."

DIA	W	A	B	D	E	P	DIA+1"	R1	R2	SLOPE
12"	2"	4"	2'-0"	6'-0"	2'-0"	19-15/16"	13"	10-1/8"	9"	1V:3H
15"	2-1/4"	6"	2'-3"	6'-0"	2'-6"	24-5/16"	16"	12-1/2"	11"	1V:3H
18"	2-1/2"	9"	2'-3"	6'-0"	3'-0"	29"	19"	15-1/2"	12"	1V:3H
24"	3"	9-1/2"	3'-7 1/2"	6'-0"	4'-0"	33-3/16"	25"	16-13/16"	14"	1V:3H
36"	4"	15"	5'-3"	8'-0"	6'-0"	47-13/16"	37"	24-5/16"	20"	1V:3H
48"	5"	24"	6'-0"	8'-0"	7'-0"	56-1/2"	49"	28-1/2"	22"	1V:3H

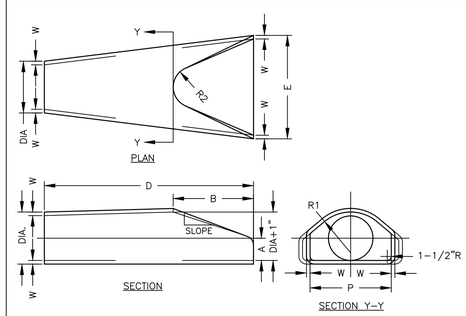

REINFORCED CONCRETE FLARED END SECTION
NOT TO SCALE

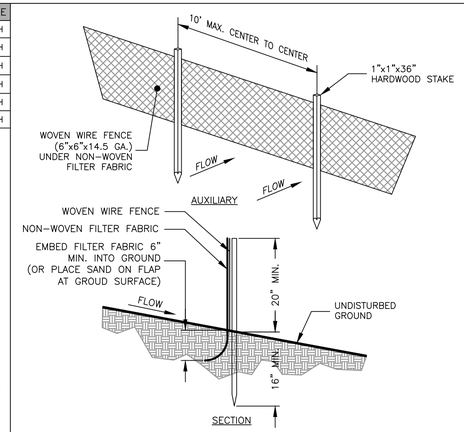

SILT FENCE
NOT TO SCALE

NOTES:
1. WOVEN WIRE FENCE (6"X6"X14.5 GA.) UNDER NON-WOVEN FILTER FABRIC TO BE USED AT ALL WETLAND CROSSINGS AND ALL AREAS WITHIN 25' OF THE WETLAND LINE. ALL OTHER LOCATIONS THE FILTER FABRIC TO BE UV RESISTANT POLYPROPYLENE WITH A MINIMUM WEIGHT OF 2.5 OZ./SY.
2. USE MULTIPLE ROWS OF SILT FENCE FOR LONG STEEP SLOPES IF NECESSARY.

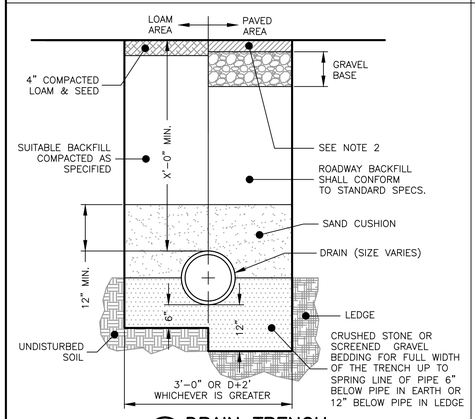

DRAIN TRENCH
NOT TO SCALE

NOTES:
1. ALL MATERIAL SHALL CONFORM TO CITY/TOWN OF DEPARTMENT OF PUBLIC WORKS.
2. NEW ROADWAY CONSTRUCTION SHALL CONFORM TO CITY/TOWN SPECIFICATIONS.
3. IN LIEU OF THE 12" GRAVEL COURSE AND 9" OF CRUSHED GRAVEL, 18" OF CRUSHED GRAVEL OR RECLAIMED STABILIZED BASE MAY BE USED AS A BASE FOR THE PAVEMENT REPAIR.
4. MATERIAL SHALL BE REPLACED IN KIND WHENEVER POSSIBLE.
5. A MINIMUM 2' CUTBACK IS REQUIRED AT THE TOP OF THE TRENCH WALL OVER UNDISTURBED MATERIAL.

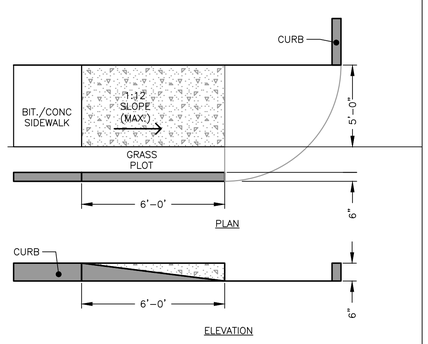

WHEELCHAIR RAMP
NOT TO SCALE

NOTE:
WHEELCHAIR RAMP SHALL COMPLY WITH ALL STATE AND FEDERAL RULES AND REGULATIONS.

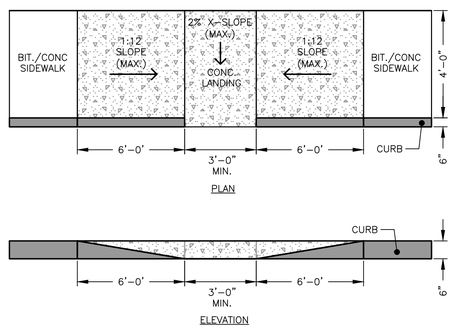

WHEELCHAIR RAMP
NOT TO SCALE

NOTE:
WHEELCHAIR RAMP SHALL COMPLY WITH ALL STATE AND FEDERAL RULES AND REGULATIONS.

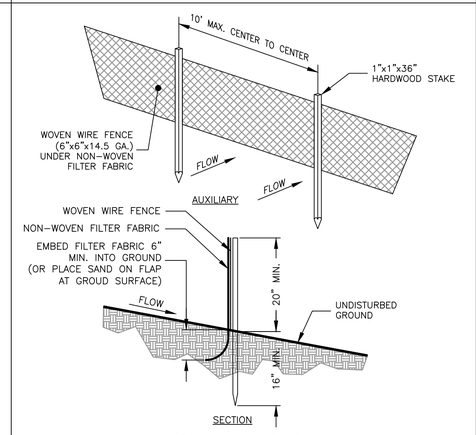

SILT FENCE
NOT TO SCALE

NOTES:
1. WOVEN WIRE FENCE (6"X6"X14.5 GA.) UNDER NON-WOVEN FILTER FABRIC TO BE USED AT ALL WETLAND CROSSINGS AND ALL AREAS WITHIN 25' OF THE WETLAND LINE. ALL OTHER LOCATIONS THE FILTER FABRIC TO BE UV RESISTANT POLYPROPYLENE WITH A MINIMUM WEIGHT OF 2.5 OZ./SY.
2. USE MULTIPLE ROWS OF SILT FENCE FOR LONG STEEP SLOPES IF NECESSARY.

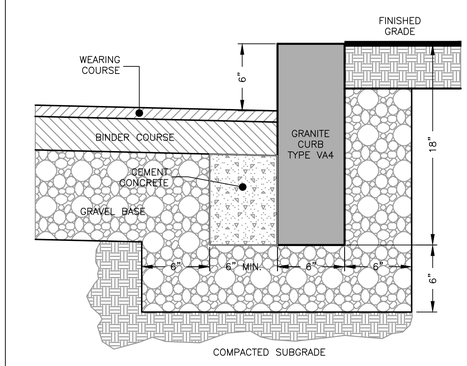

VERTICAL GRANITE CURB
NOT TO SCALE

Owner / Applicant

Owner: The Goddard Family Trust

Applicant: Artis Senior Living, LLC
1651 Old Meadow Road
Suite 100
McLean, VA 22101

Prepared For:

Prepared By:

Hayes Engineering, Inc.
603 Salem Street
Wakefield, MA 01880
Phone: 781.246.9000
Fax: 781.246.7596
www.hayesengg.com

Design By: PJO
Drawn By: JST
Checked By: PJO
Project File: REA-0387
Comp. No: REA161

- ☐ Issued For Permit
- ☐ Issued For Review
- ☐ Issued For Bid
- ☐ Issued For Construction
- ☐ Not For Construction

No.	Revision	Town Planner Comments	Date
1			5/31/2013
2			
3			
4			
5			
6			
7			
8			
9			
10			

Scale: 1"=30' (0' 15' 30' 60')

Date: May 23, 2013

Drawing Title:

DETAIL SHEET
ARTIS SENIOR LIVING
#1090 & 1100 MAIN STREET
READING, MASS.

Seal:

Drawing No.: C-4

SHEET 5 OF 9

N:\REA161\SP1100main_R8.dwg, 6/3/2013 3:57:09 PM, JST

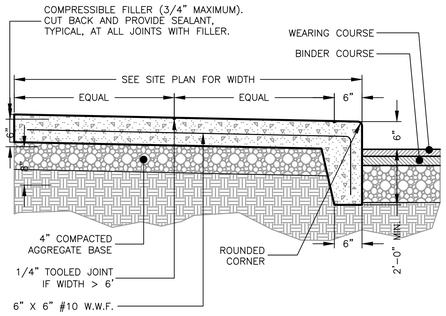

CONCRETE SIDEWALK (BUILDING PERIMETER)
NOT TO SCALE

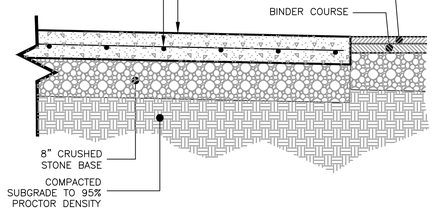

DUMPSTER PAD
NOT TO SCALE

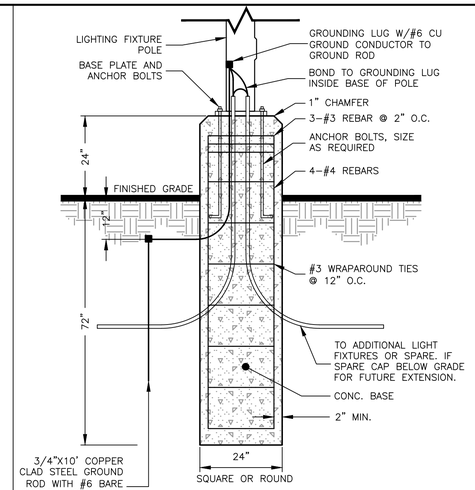

LIGHT POLE BASE
NOT TO SCALE

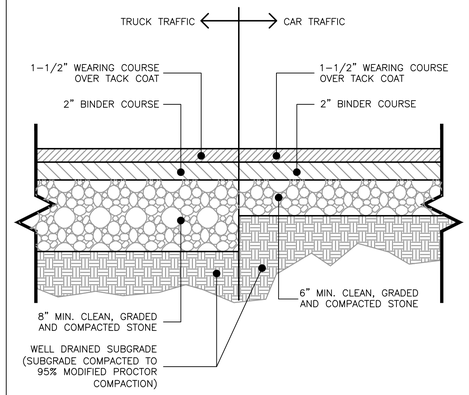

PAVEMENT SECTION
NOT TO SCALE

NOTE:
THIS PAVEMENT SECTION DETAIL REFLECTS MINIMUM REQUIREMENTS. ENGINEER TO DETERMINE DESIGN BASED ON GEOTECHNICAL DATA.

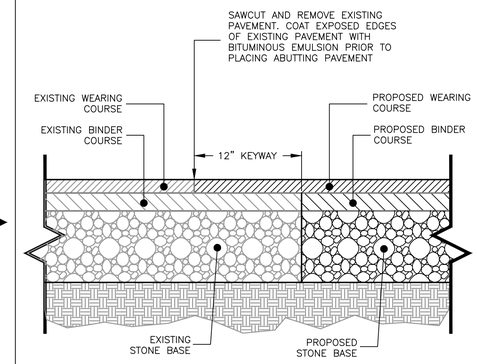

PAVEMENT KEYWAY
NOT TO SCALE

NOTE:
THIS PAVEMENT SECTION DETAIL REFLECTS MINIMUM REQUIREMENTS. ENGINEER TO DETERMINE DESIGN BASED ON GEOTECHNICAL DATA.

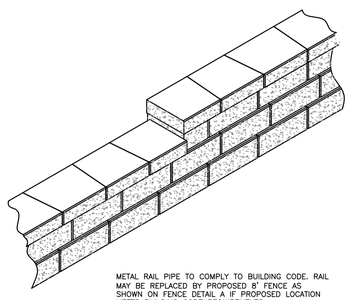

METAL RAIL PIPE TO COMPLY TO BUILDING CODE. RAIL MAY BE REPLACED BY PROPOSED 8' FENCE AS SHOWN ON FENCE DETAIL A IF PROPOSED LOCATION MEETS BUILDING CODE REQUIREMENTS

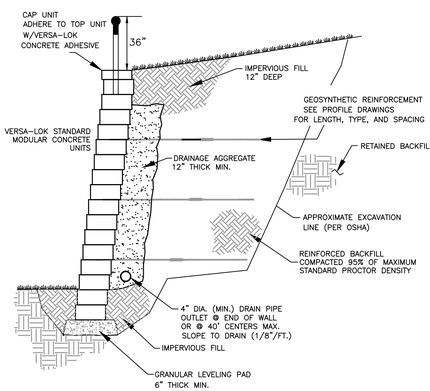

MODULAR CONCRETE UNIT
SCALE: NONE
NOT FOR CONSTRUCTION

SEE SHEET C-3 FOR RETAINING WALL HEIGHT (WALL HEIGHT VARIES)

TYPICAL SECTION-REINFORCED RETAINING WALL
NOT TO SCALE

NOTE: TYPICAL WALL DESIGN SHOWN. ACTUAL WALL TO BE DESIGN AND INSPECTED BY A CIVIL ENGINEER AND APPROVED BY THE TOWN OF READING ENGINEERING PRIOR TO CONSTRUCTION.

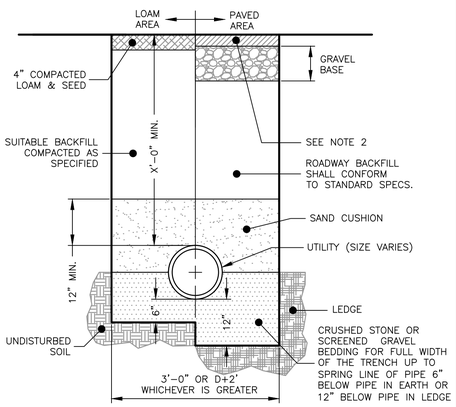

UTILITY TRENCH
NOT TO SCALE

NOTES:
1. ALL MATERIAL SHALL CONFORM TO CITY/TOWN OF DEPARTMENT OF PUBLIC WORKS.
2. NEW ROADWAY CONSTRUCTION SHALL CONFORM TO CITY/TOWN SPECIFICATIONS.
3. IN LIEU OF THE 12" GRAVEL COURSE AND 9" OF CRUSHED GRAVEL, 18" OF CRUSHED GRAVEL OR RECLAIMED STABILIZED BASE MAY BE USED AS A BASE FOR THE PAVEMENT REPAIR.
4. MATERIAL SHALL BE REPLACED IN KIND WHENEVER POSSIBLE.
5. A MINIMUM 2' CUTBACK IS REQUIRED AT THE TOP OF THE TRENCH WALL OVER UNDISTURBED MATERIAL.

ALL WOOD TO BE PRESSURE TREATED

GATES WILL MATCH THE FENCING AND BE INSTALLED ON METAL POSTS.

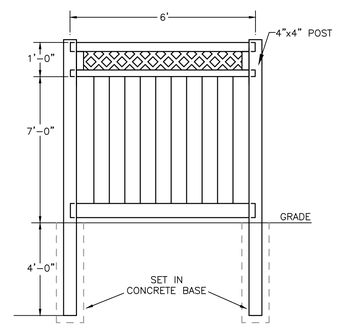

A 7' FENCE W/ 1' LATTICE ABOVE
NOT TO SCALE

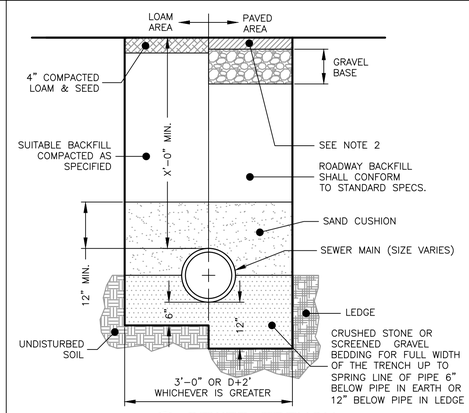

SEWER TRENCH
NOT TO SCALE

NOTES:
1. ALL MATERIAL SHALL CONFORM TO CITY/TOWN OF DEPARTMENT OF PUBLIC WORKS.
2. NEW ROADWAY CONSTRUCTION SHALL CONFORM TO CITY/TOWN SPECIFICATIONS.
3. IN LIEU OF THE 12" GRAVEL COURSE AND 9" OF CRUSHED GRAVEL, 18" OF CRUSHED GRAVEL OR RECLAIMED STABILIZED BASE MAY BE USED AS A BASE FOR THE PAVEMENT REPAIR.
4. MATERIAL SHALL BE REPLACED IN KIND WHENEVER POSSIBLE.
5. A MINIMUM 2' CUTBACK IS REQUIRED AT THE TOP OF THE TRENCH WALL OVER UNDISTURBED MATERIAL.

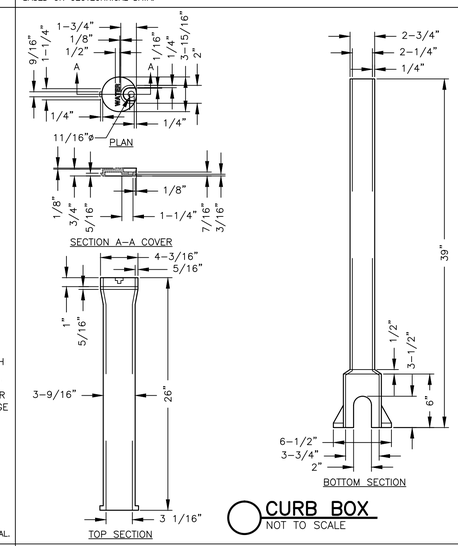

CURB BOX
NOT TO SCALE

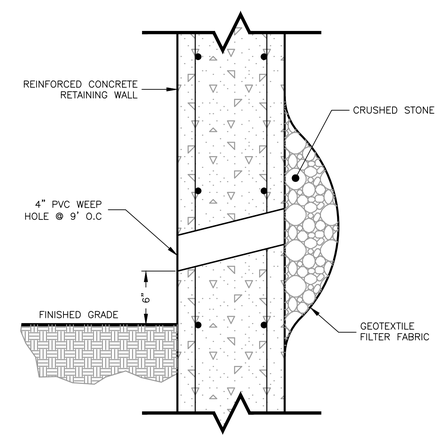

RETAINING WALL WEEPHOLE
NOT TO SCALE

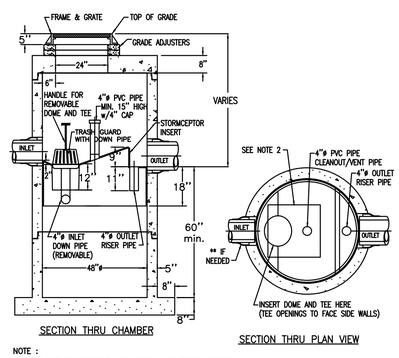

SECTION THRU CHAMBER

SECTION THRU PLAN VIEW

NOTE :
1. THE USE OF FLEXIBLE CONNECTIONS IS RECOMMENDED AT THE OUTLET WHERE APPLICABLE.
2. THE COVER SHOULD BE POSITIONED OVER THE 4"ø CLEANOUT/VENT PIPE AND THE 4"ø INLET DOWN PIPE.
3. THE STORMCEPTOR SYSTEM IS PROTECTED BY ONE OR MORE OFF THE FOLLOWING U.S. PATENTS: #4985148, #5498331, #5725760, #5753115, #5849181.
4. CONTRACTOR TO PROVIDE CRANE TO SET UNIT (HEAVIEST SECTION WEIGHS 5000 LB)

STC 450i - STORMCEPTOR
NOT TO SCALE

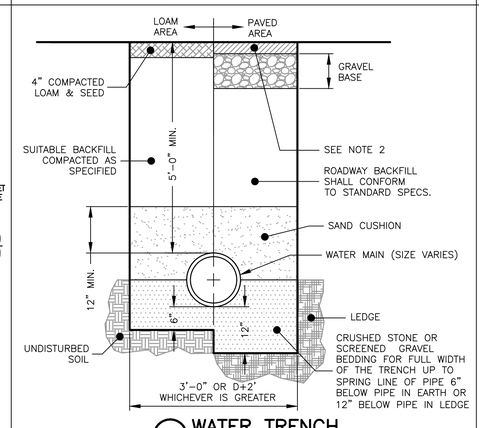

WATER TRENCH
NOT TO SCALE

NOTES:
1. ALL MATERIAL SHALL CONFORM TO CITY/TOWN OF DEPARTMENT OF PUBLIC WORKS.
2. NEW ROADWAY CONSTRUCTION SHALL CONFORM TO CITY/TOWN SPECIFICATIONS.
3. IN LIEU OF THE 12" GRAVEL COURSE AND 9" OF CRUSHED GRAVEL, 18" OF CRUSHED GRAVEL OR RECLAIMED STABILIZED BASE MAY BE USED AS A BASE FOR THE PAVEMENT REPAIR.
4. MATERIAL SHALL BE REPLACED IN KIND WHENEVER POSSIBLE.
5. A MINIMUM 2' CUTBACK IS REQUIRED AT THE TOP OF THE TRENCH WALL OVER UNDISTURBED MATERIAL.

Prepared For:

Owner / Applicant

Owner: The Goddard Family Trust

Applicant: Artis Senior Living, LLC
1651 Old Meadow Road
Suite 100
McLean, VA 22101

Prepared By:

Hayes Engineering, Inc.
603 Salem Street
Wakefield, MA 01880
Phone: 781.246.7200
Fax: 781.246.7596
www.hayesengg.com

Design By: PJO
Drawn By: JST
Checked By: PJO
Project File: REA-0387
Comp. No: REA161

- [ ] Issued For Permit
- [ ] Issued For Review
- [ ] Issued For Bid
- [ ] Issued For Construction
- [ ] Not For Construction

No.	Revision	Date
1	Town Planner Comments	5/31/2013
2		
3		
4		
5		
6		
7		
8		
9		
10		

Scale: 1"=30'
0' 15' 30' 60'

Date: May 23, 2013

Drawing Title:

DETAIL SHEET
ARTIS SENIOR LIVING
#1090 & 1100 MAIN STREET
READING, MASS.

Seal:

Drawing No.:

C-5

SHEET 6 OF 9

N:\REA161\SP1100main_R0.dwg, 6/3/2013 3:57:26 PM, JST

STATISTICS

DESCRIPTION	AVERAGE	MAXIMUM	MINIMUM	MAX/MIN	AVG/MIN
PARKING LOT	1.5 FC	5.4 FC	0.2 FC	27.0:1	7.5:1
FRONT SIDEWALK	0.7 FC	1.9 FC	0.0 FC	N/A	N/A
NORTH SIDEWALK	0.2 FC	6.9 FC	0.0 FC	N/A	N/A
BACK SIDEWALK	0.4 FC	42.0 FC	0.0 FC	N/A	N/A
SOUTH SIDEWALK	0.4 FC	33.7 FC	0.0 FC	N/A	N/A
SIDEWALK @ PARKING	1.7 FC	3.5 FC	0.4 FC	8.8:1	4.3:1
10' BEYOND PROPERTY LINE	0.0 FC	0.8 FC	0.0 FC	N/A	N/A

FIXTURE TYPE(S)

SYMBOL	MFR	CATALOG NUMBER	LAMP	LUMENS	LLF	MTG HEIGHT
A	KIM	1SA/SET3/150PMH208/DB	M150/PMH	9200	.68	16'–0" POLE
A1	KIM	1SA/SET3/150PMH208/DB/HS	M150/PMH	9200	.68	16'–0" POLE
A2	KIM	1SA/SET4/150PMH208/DB	M150/PMH	9200	.68	16'–0" POLE
A3	KIM	1SA/SET4/150PMH208/DB/HS	M100/PMH	9200	.68	16'–0" POLE
A4	KIM	2SB/SET4/150PMH208/DB	M50/U/C	9200	.68	16'–0" POLE
B	KIM	CB24/50MH/DB	M50/U/C	2850	.68	2'–0"AFF
C	BRONZELITE	AL1513F–DB	13W FLUORESCENT PLC13	690	.68	5"AFF

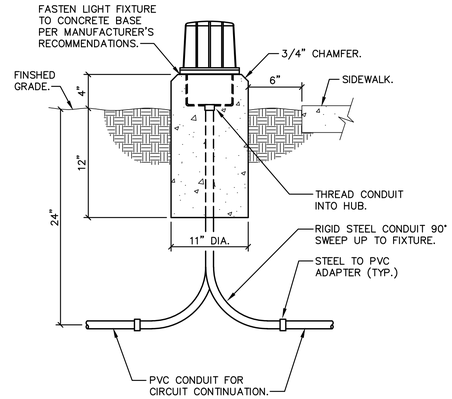

D FIXTURE TYPE 'C' MOUNTING DETAIL
N.T.S.

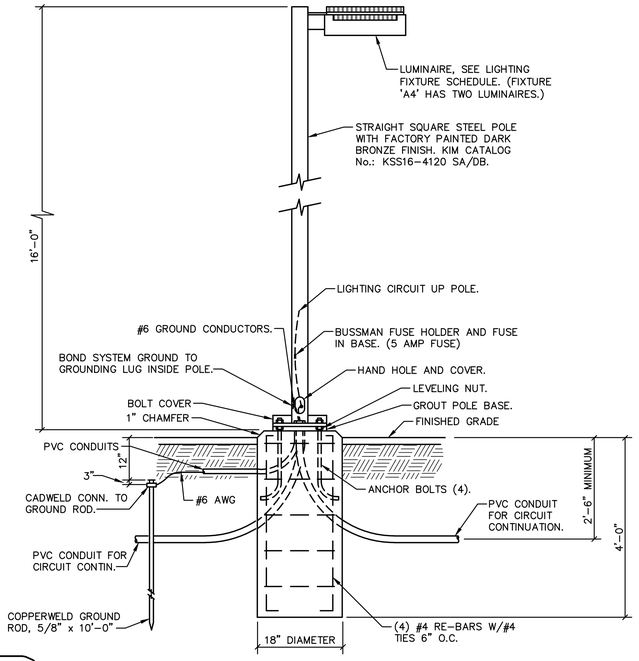

B FIXTURE TYPE 'A' THRU 'A4' MOUNTING DETAIL
N.T.S.

NOTE:
ALL EXTERIOR LIGHTING FIXTURES ARE FULL CUTOFF EXCEPT PATHWAY MARKER LIGHTS TYPE 'C' WHICH ARE LOCATED BEHIND THE BUILDING IN AN ENCLOSED COURTYARD.

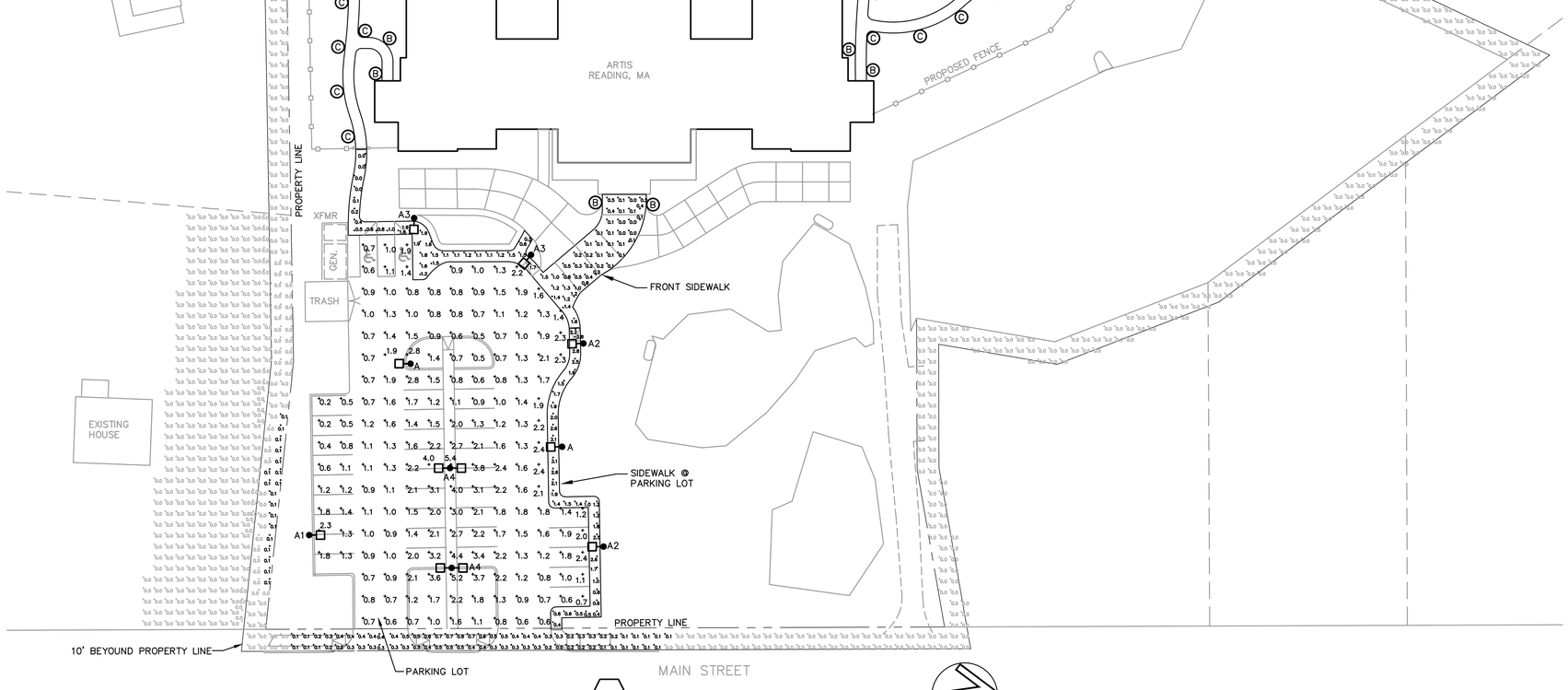

A SITE LIGHTING PLAN
1" = 30'–0"

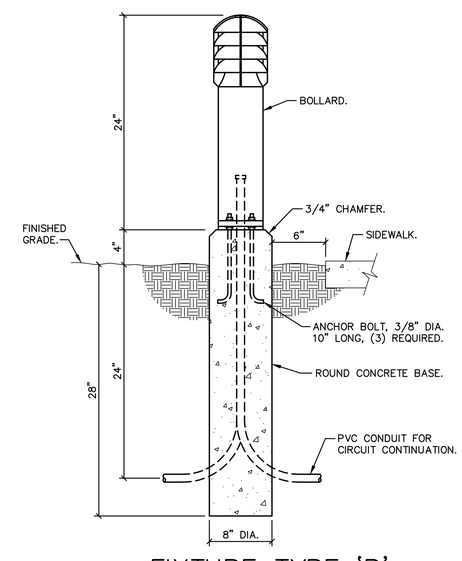

C FIXTURE TYPE 'B' MOUNTING DETAIL
N.T.S.

PRINTS ISSUED

DATE	PURPOSE	NO.

ARTIS SENIOR LIVING
READING, MA

David L. Hoffman, FAIA
Architect

David L. Hoffman, FAIA Architect ©
345 Riverview Wichita, KS 67203
T 316.268.0230 F 316.268.0205

CONTACT:
DRAWN: DS
CHECKED: RICHARD WILEY

PROJECT NUMBER:
XXXXX

SHEET TITLE:
SITE LIGHTING PLAN

SHEET NUMBER:
C-6 OF: C-6.1

L/K DWG. NAME: C-6.dwg; Jun 3 2013 – 10:55am; LAST EDITED BY: dschoffstall

PAGE #1 FIXTURE TYPE 'A' THRU 'A4'

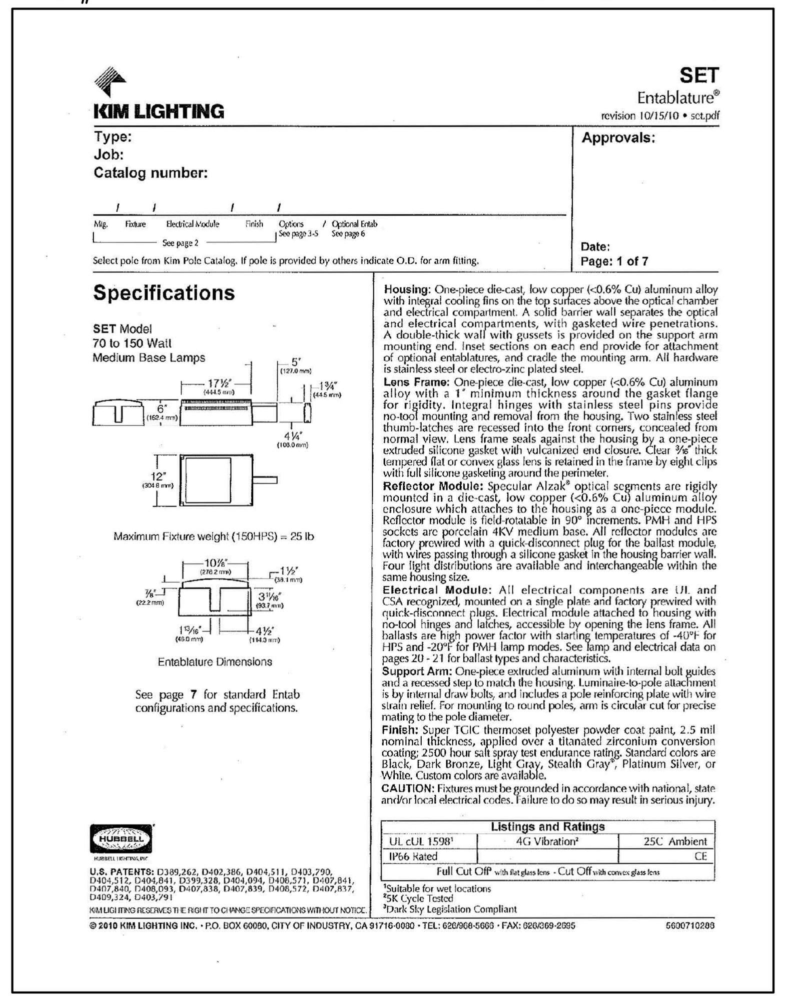

PAGE #2 FIXTURE TYPE 'A' THRU 'A4'

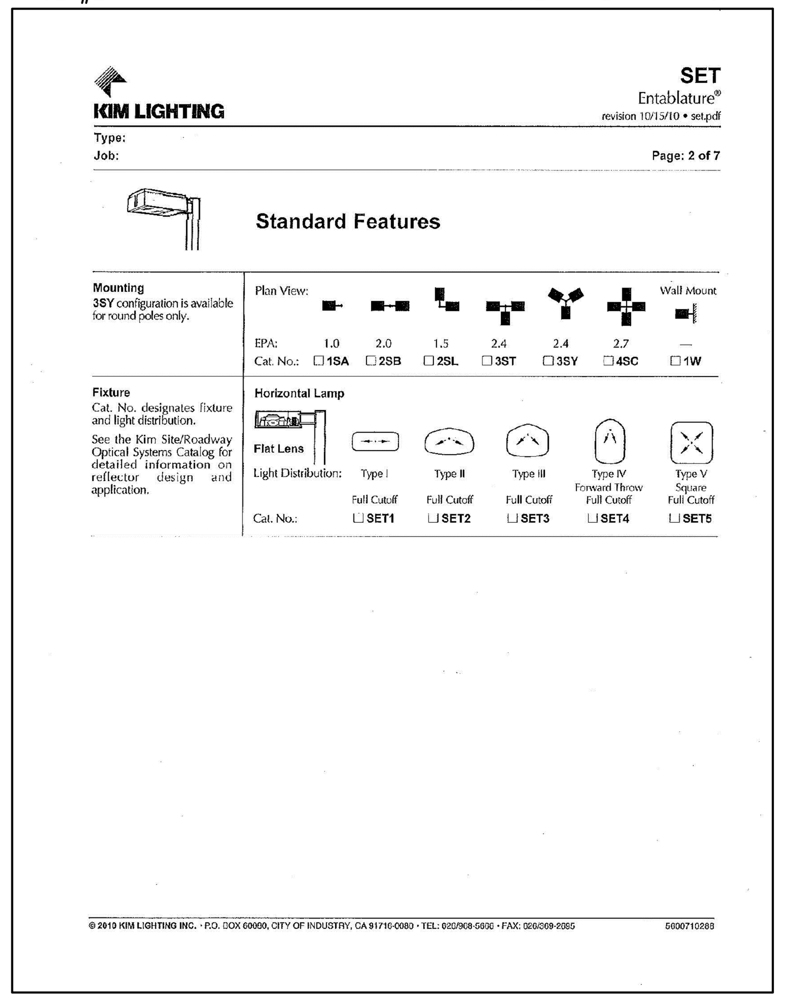

PAGE #3 FIXTURE TYPE 'A' THRU 'A4'

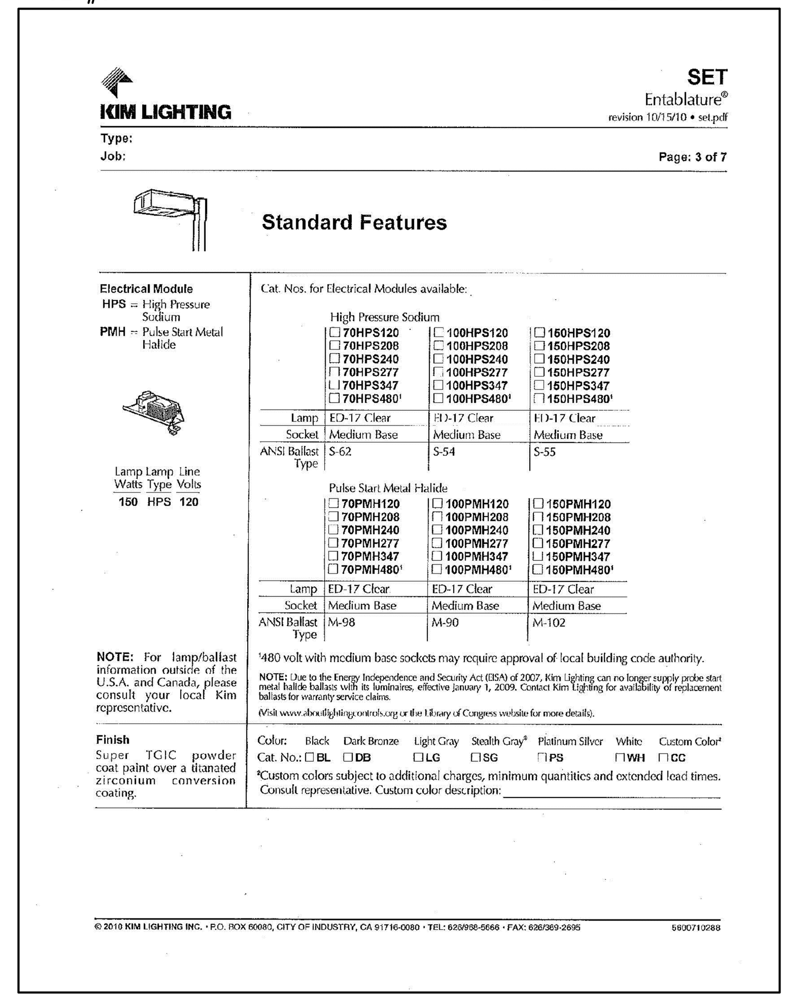

PAGE #4 FIXTURE TYPE 'A1' AND 'A3'

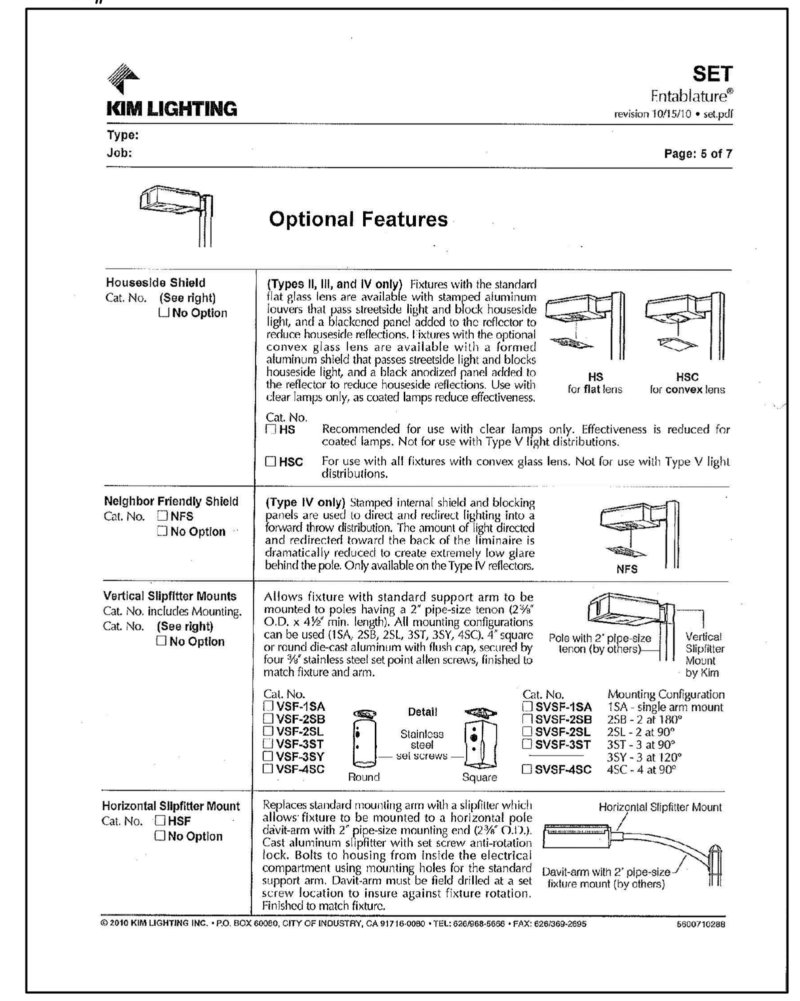

SYMBOL	CATALOG NUMBER	MOUNTING	FIXTURE LAMP DISTRIBUTION TYPE	LAMP	COLOR	SHIELDING
A	1SA/SET3/150PMH208/DB	1 LUMINAIRE (1SA)	TYPE 3 (SET 3)	150W METAL HALIDE	DARK BRONZE	–
A1	1SA/SET3/150PMH208/DB/HS	1 LUMINAIRE (1SA)	TYPE 3 (SET 3)	150W METAL HALIDE	DARK BRONZE	SEE SHEET #4 (HS)
A2	1SA/SET4/150PMH208/DB	1 LUMINAIRE (1SA)	TYPE 4 (SET 4)	150W METAL HALIDE	DARK BRONZE	–
A3	1SA/SET4/150PMH208/DB/HS	1 LUMINAIRE (1SA)	TYPE 4 (SET 4)	150W METAL HALIDE	DARK BRONZE	SEE SHEET #4 (HS)
A4	2SB/SET4/150PMH208/DB	2 @ 180° (2SB)	TYPE 4 (SET 4)	150W METAL HALIDE	DARK BRONZE	–

PAGE #5 POLE FOR FIXTURE TYPE 'A' THRU 'A4'

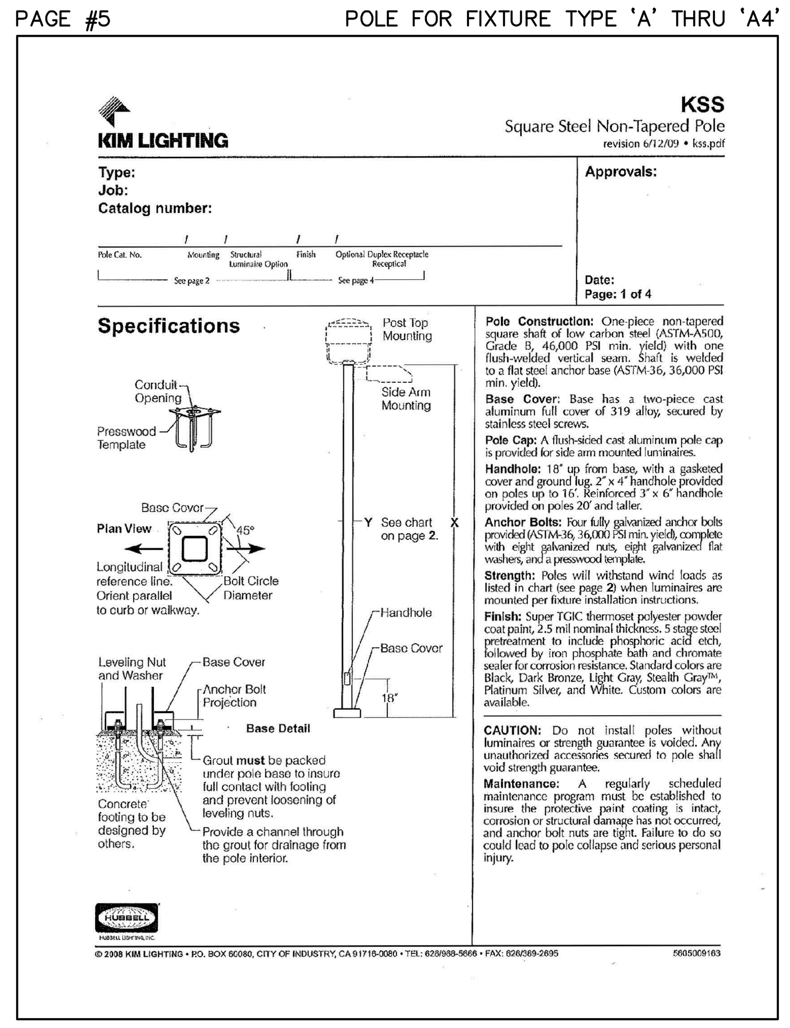

PAGE #6 POLE FOR FIXTURE TYPE 'A' THRU 'A4'

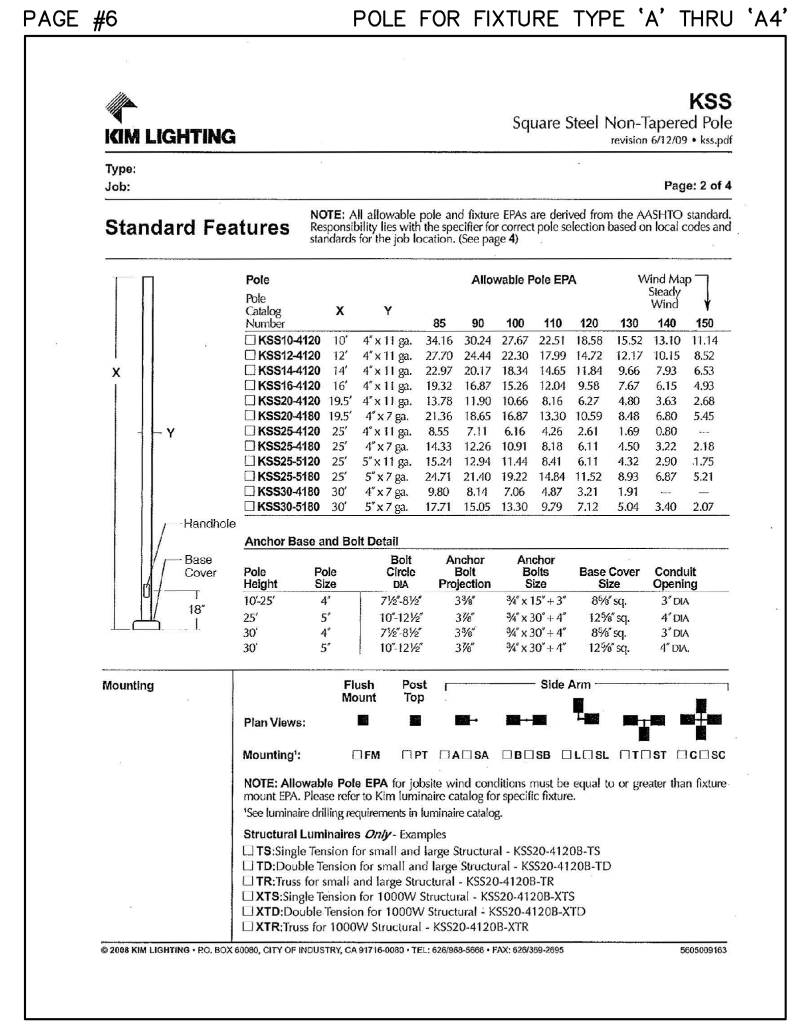

PAGE #7 POLE FOR FIXTURE TYPE 'A' THRU 'A4'

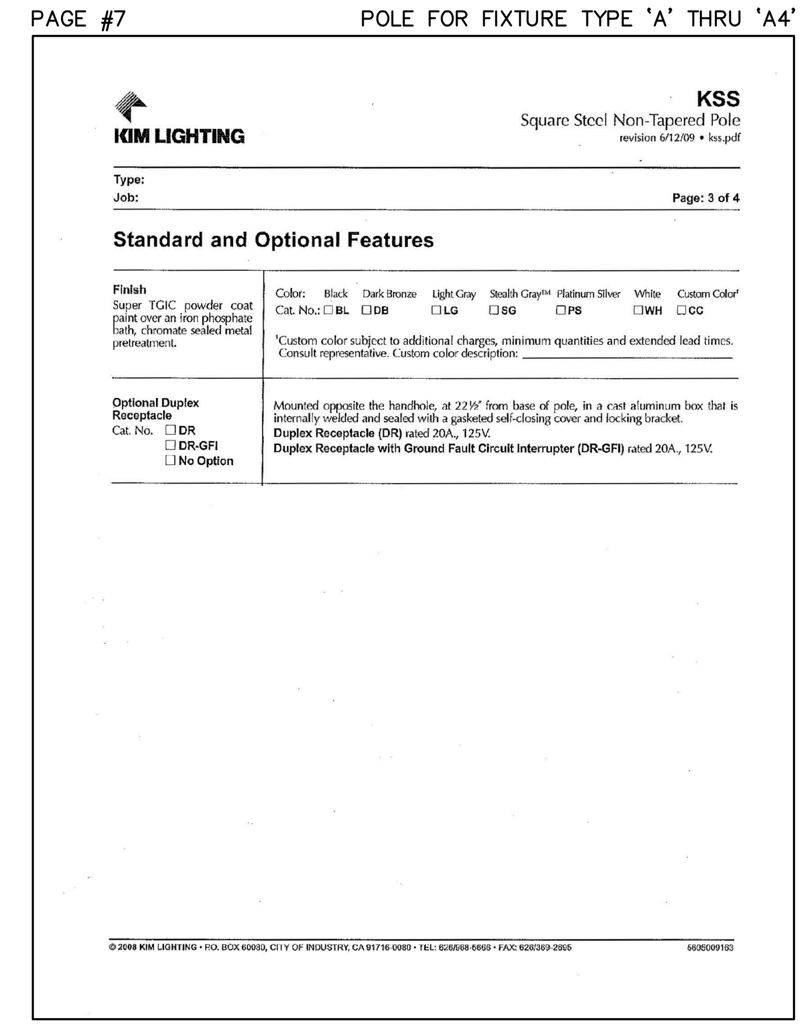

SYMBOL	CATALOG NUMBER	POLE HEIGHT	SIZE	COLOR
POLE	KSS16-4120 XX/DB	16'	4" x 11 GAGE	DARK BRONZE

XX = SA SINGLE LUMINAIRE MOUNT, SB DOUBLE LININAIRE MOUNT.

PAGE #8 FIXTURE TYPE 'B'

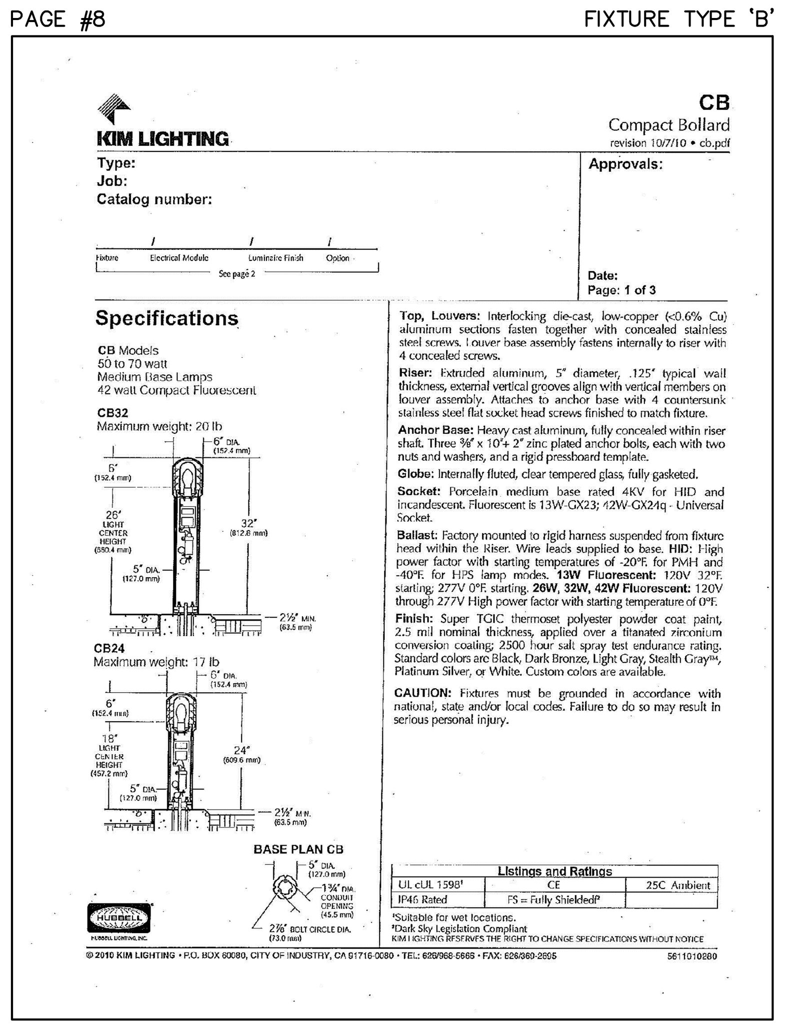

PAGE #9 FIXTURE TYPE 'B'

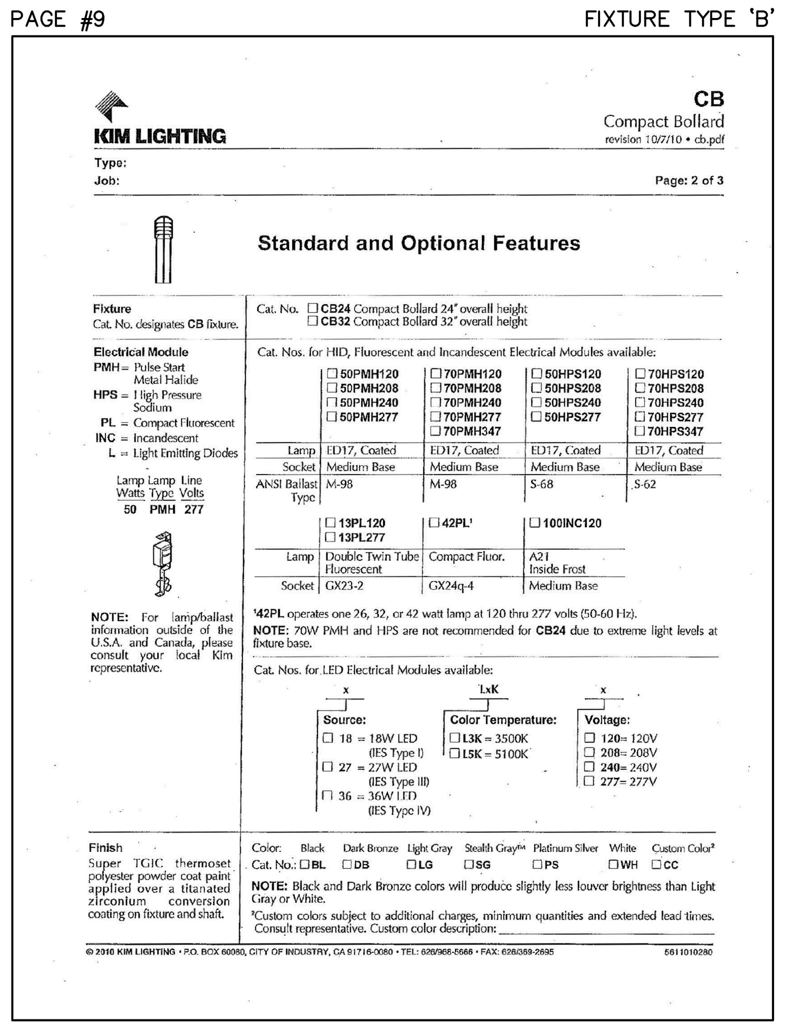

PAGE #10 FIXTURE TYPE 'B'

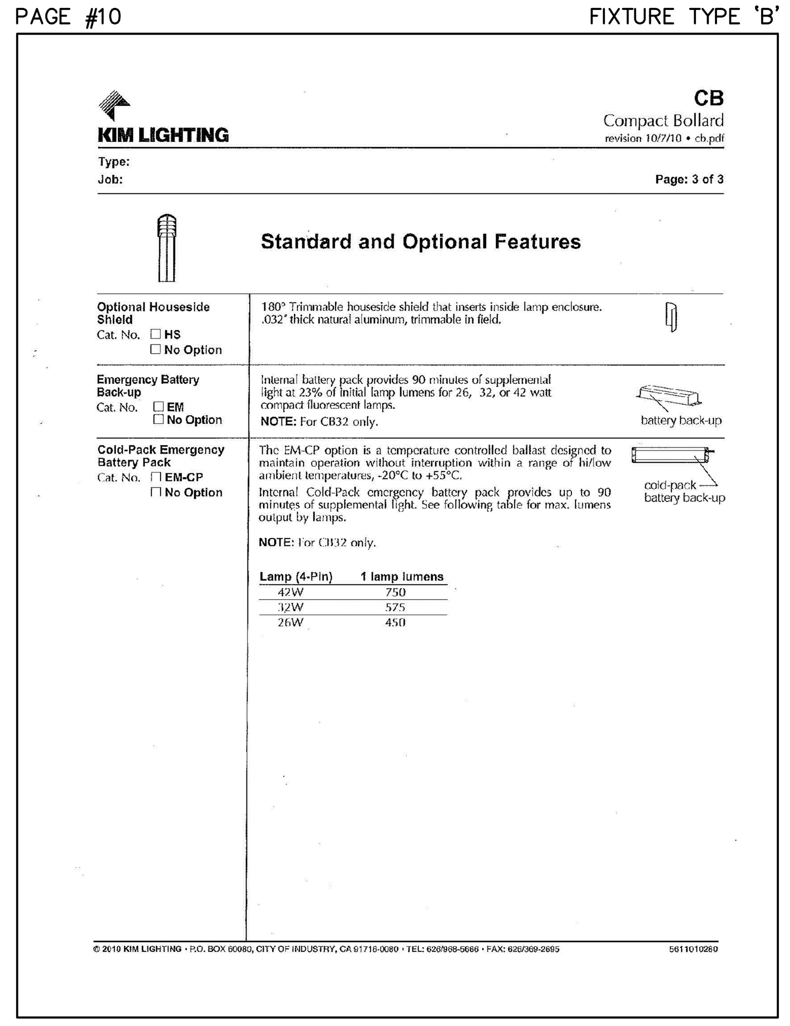

SYMBOL	CATALOG NUMBER	MOUNTING	LAMP	COLOR
B	CB24/50MH/DB	4"AFG – CONCRETE BASE	50W METAL HALIDE	DARK BRONZE

PAGE #11 FIXTURE TYPE 'C'

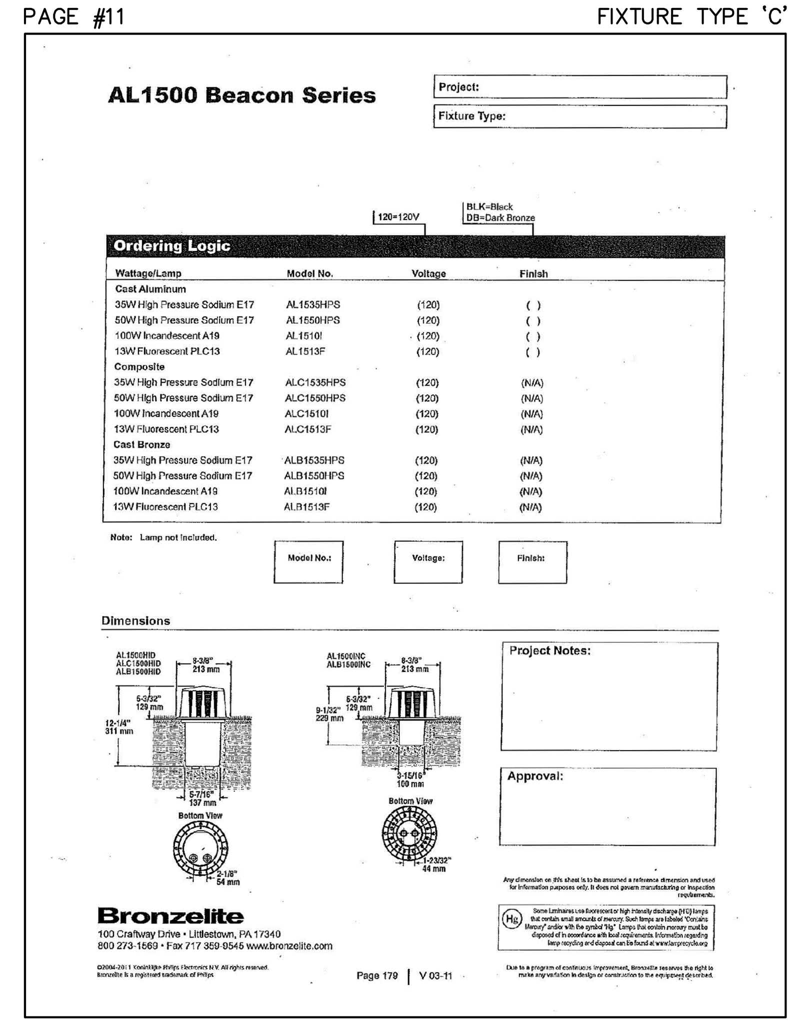

PAGE #1 FIXTURE TYPE 'C'

SYMBOL	CATALOG NUMBER	MOUNTING	LAMP	COLOR
C	AL1513F-DB	4"AFG – CONCRETE BASE	13W FLUORESCENT PLC13	DARK BRONZE

L/K DWG. NAME: C-6.1.dwg; Jun 3 2013 – 10:54am; LAST EDITED BY: dschoffstall

PRINTS ISSUED

DATE	PURPOSE	NO.

ARTIS SENIOR LIVING
READING, MA

David L. Hoffman, FAIA
Architect

David L. Hoffman, FAIA Architect ©
345 Riverview Wichita, KS 67203
T 316.268.0230 F 316.268.0205

CONTACT:

DRAWN: DS

CHECKED: RICHARD WILEY

PROJECT NUMBER:

XXXXX

SHEET TITLE:

SITE LIGHTING CUT SHEETS

SHEET NUMBER:

C-6 OF: C-6.1

THE GODDARD FAMILY TRUST
PARCEL 145
17742/202
[LOTS 10 & 3C ON PLAN NO. 1366 OF 1983]
ASSESSOR MAP 39 PARCEL 145
#1090 MAIN STREET

TOTAL PARCEL AREA
93,268 S.F.
2.141 ACRES

PARCEL 140
25142/137
[LOT 22 ON PLAN NO. 1129 OF 1994]
ASSESSOR MAP 39 PARCEL 140
#1100 MAIN STREET

TOTAL PARCEL AREA
61,165 S.F. (CALC) 1.404 ACRES
61,220 S.F. (RECORD) 1.405 ACRES

Plan No. 1366 of 1983

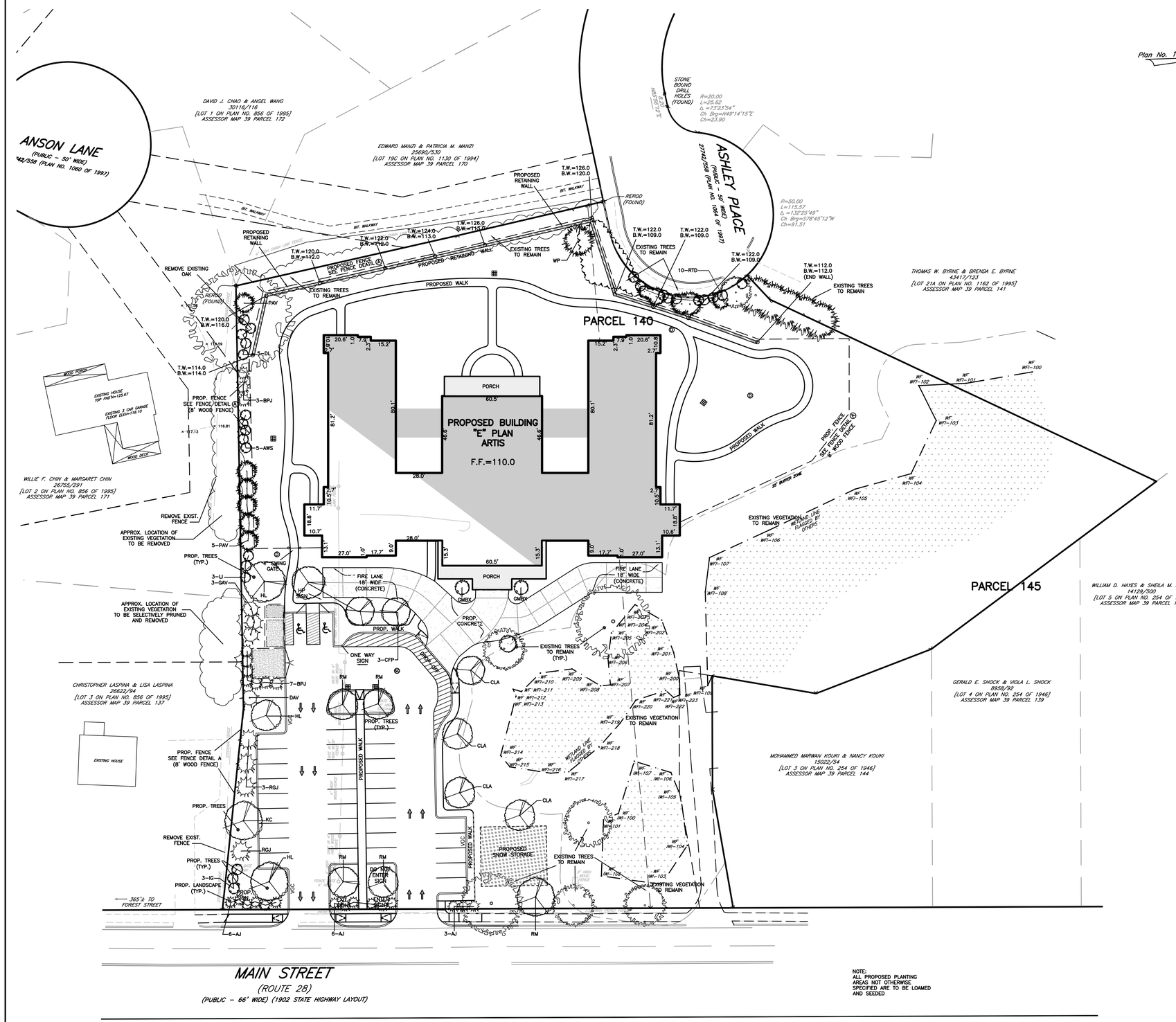

NOTE:
ALL PROPOSED PLANTING AREAS NOT OTHERWISE SPECIFIED ARE TO BE LOAMED AND SEEDED

Plant Schedule

Qty	Key	Botanical Name	Common Name	Size
DECIDUOUS TREES:				
3	CFP	Pyrus calleryana 'Chanticleer'	Chanticleer Flowering Pear	2-2.5"cal
4	CLA	Cladrastis lutea	Yellowwood	2-2.5"cal
3	HL	Gleditsia triacanthos 'Skyline'	Honeylocust	2-2.5"cal
1	KC	Prunus serrulata 'Kwanzan'	Pink Flowering Cherry	2-2.5"cal
5	RM	Acer rubrum 'Red Sunset'	Red Sunset Maple	2-2.5"cal
EVERGREENS:				
10	BPJ	Juniperus chinensis 'Blue Point'	Blue Point Juniper	6-7'
1	DAV	Thuja occidentalis 'Nigra'	Dark American Arborvitae	7-8'
3	GAV	Thuja x plicata 'Green Giant'	Green Giant Arborvitae	7-8'
6	PAV	Thuja occidentalis 'Pyramidalis'	Pryramidal Arborvitae	7-8'
4	RGJ	Juniperus chinensis 'Robusta Green'	Robusta Green Juniper	6-7'
1	WP	Pinus strobus	White Pine	8-10'
SHRUBS:				
15	AJ	Juniperus horizontalis 'Andorra Compacta'	Andorra Juniper	18-24"
5	AWS	Spirea x bumalda 'Anthony Waterer'	Anthony Waterer Spirea	18-24"
5	DL	Syringa meyeri 'Palabin'	Dwf. Korean Lilac	18-24"
2	GMBX	Buxus sempervirens 'Green Mountain'	Green Mountain Boxwood	3-3.5'
3	IG	Ilex glabra 'Shamrock'	Shamrock Inkberry	2-2.5'
3	LI	Syringa vulgaris	Common Lilac	3-4'
10	RTD	Cornus alba 'Elegantissima'	Varigated Red Twig Dogwood	2-3'

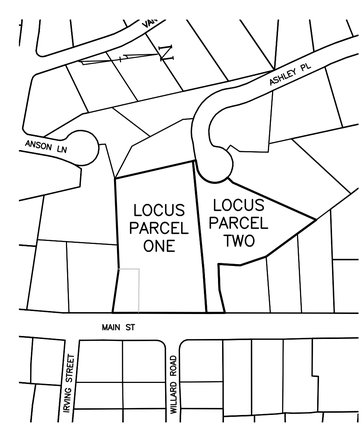

Vicinity Map
Scale: 1" = 200'±

Prepared For:
Owner / Applicant
Owner: The Goddard Family Trust
Applicant: Artis Senior Living, LLC
1651 Old Meadow Road
Suite 100
McLean, VA 22101

Prepared By:
Hayes Engineering, Inc.
603 Salem Street
Wilmington, MA 01880
Ph: 781.246.2800
Fax: 781.246.7596
www.hayesengi.com

Design By: PJO
Drawn By: JST
Checked By: PJO
Project File: REA-0387
Comp. No: REA161
☐ Issued For Permit
☐ Issued For Review
☐ Issued For Bid
☐ Issued For Construction
☐ Not For Construction

No.	Revision	Date
1	Town Planner Comments	5/31/2013
2		
3		
4		
5		
6		
7		
8		
9		
10		

Scale: 1"=30'
0' 15' 30' 60'
Date: May 23, 2013

Drawing Title:
LANDSCAPE PLAN
ARTIS SENIOR LIVING
#1090 & 1100 MAIN STREET
READING, MASS.

Seal:
COMMONWEALTH OF MASSACHUSETTS
PAUL K. CARLSON
No. 1328
REGISTERED LANDSCAPE ARCHITECT

Drawing No.:
C-7
SHEET 9 OF 9

David L. Hoffman, FAIA

Artis Senior Living

David L. Hoffman, FAIA

Artis Senior Living

David L. Hoffman, FAIA

Artis Senior Living

David L. Hoffman, FAIA

Artis Senior Living

David L. Hoffman, FAIA

Artis Senior Living

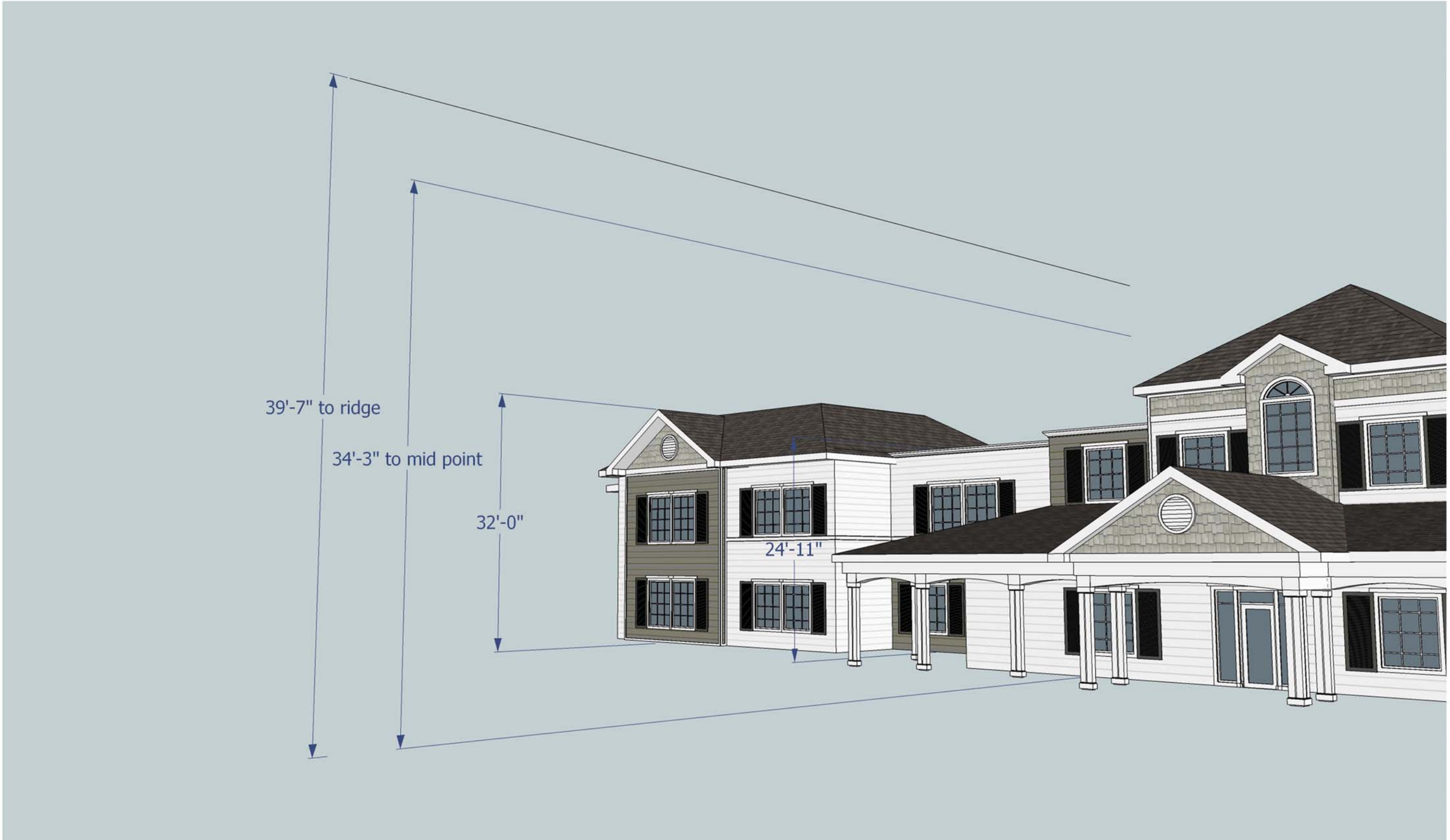

David L. Hoffman, FAIA

Artis Senior Living

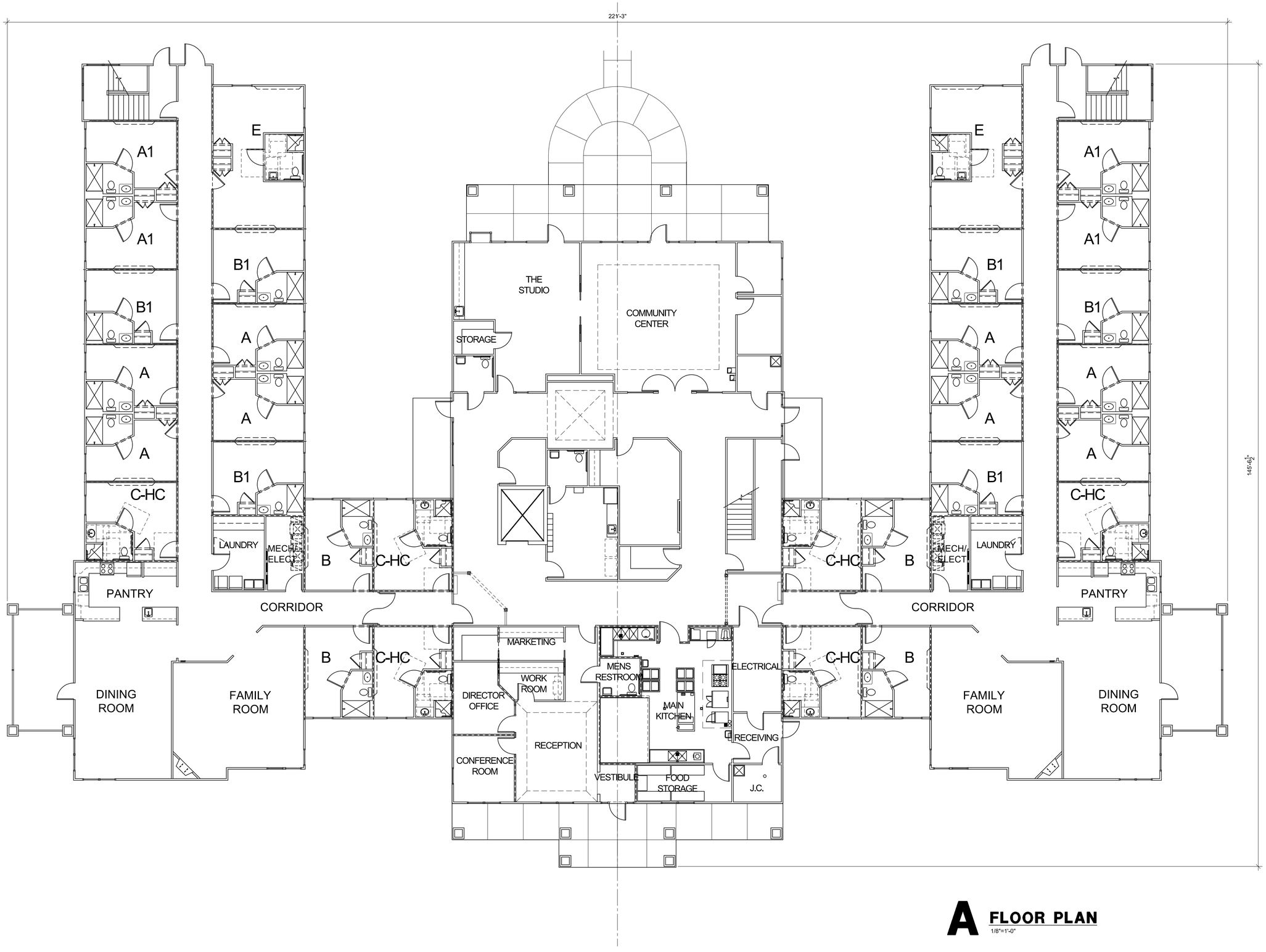

A FLOOR PLAN

1/8"=1'-0"

May 29, 2013 – 10:20am – USER pfolger
\Healthcare\11614-ArtisSeniorLiving Concept\Prototypes\Reading, MA\2013.05.28 For City\A-1 Reading.dwg

PRINTS ISSUED

DATE	PURPOSE	NO.

ARTIS SENIOR LIVING :
READING, MA

David L. Hoffman, FAIA
Architect

David L. Hoffman, FAIA
Architect ©
345 Riverview Wichita, KS 67203
T 316.268.0230 F316.268.0205
CONTACT: Dan Dokken

DRAWN: PDF
CHECKED:
PROJECT NUMBER:

SHEET TITLE:
FLOOR PLAN

SHEET NUMBER:
A1.1 OF: ?

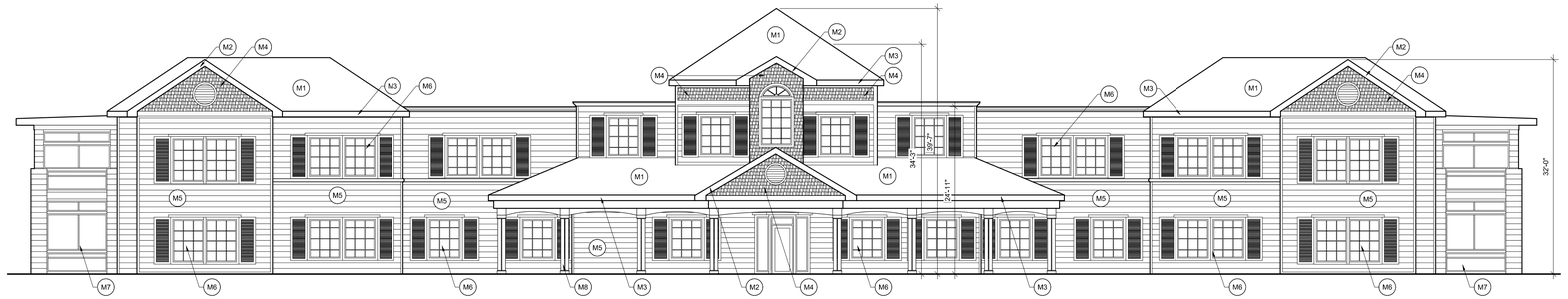

A FRONT ELEVATION

3/32"=1'-0"

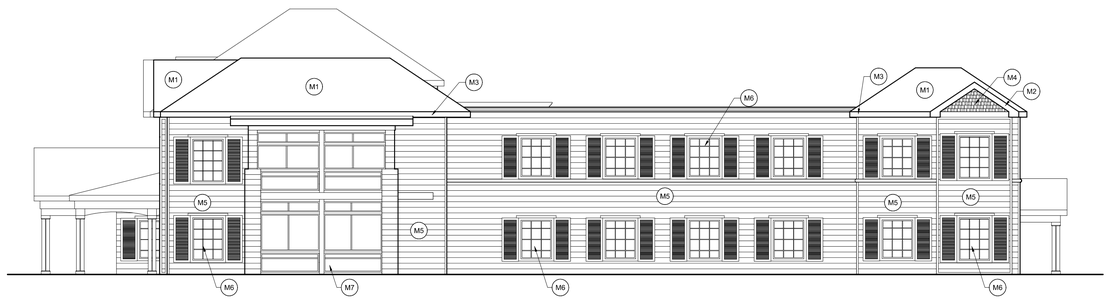

B RIGHT ELEVATION

3/32"=1'-0"

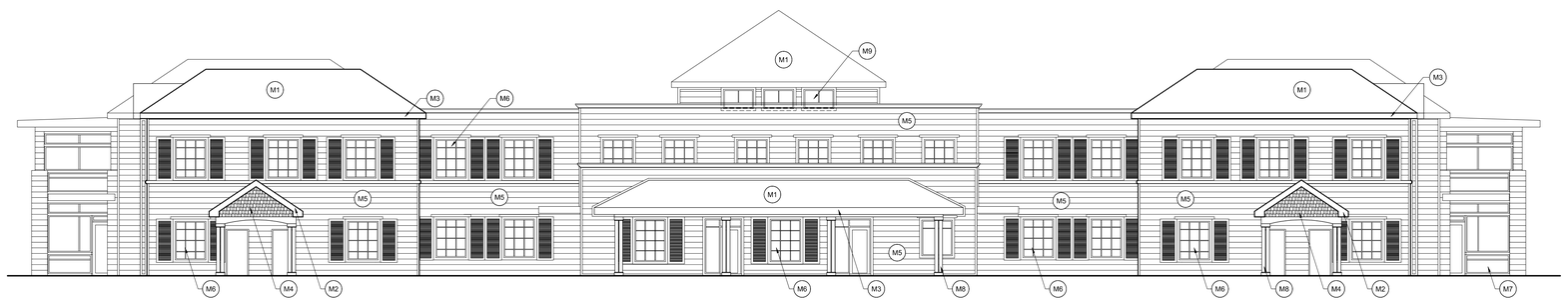

C REAR ELEVATION

3/32"=1'-0"

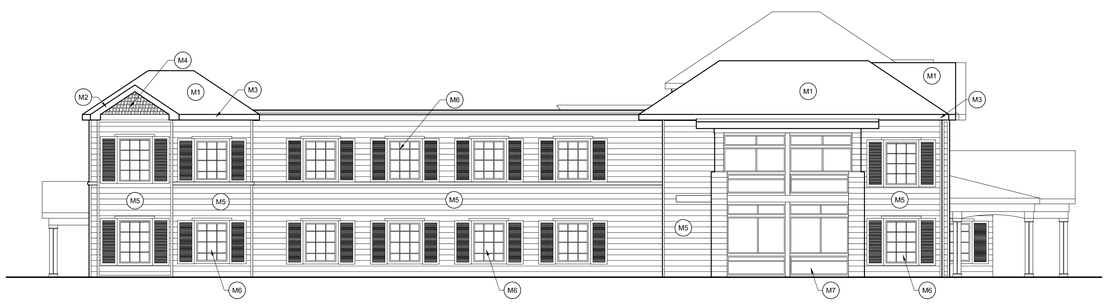

D LEFT ELEVATION

3/32"=1'-0"

MATERIAL LEGEND	
COMPOSITION SHINGLES	M1
PRE-FINISHED ALUMINUM FASCIA	M2
PRE-FINISHED ALUMINUM GUTTERS & DOWNSPOUTS	M3
DECORATIVE FIBER CEMENT SIDING	M4
FIBER CEMENT SIDING	M5
VINYL WINDOWS	M6
ALUMINUM CLAD SCREENED PORCH SYSTEM	M7
DECORATIVE PAINTED WOOD COLUMNS	M8
VINYL WINDOWS AT CLEARSTORY	M9

PRINTS ISSUED

DATE	PURPOSE	NO.

ARTIS SENIOR LIVING :
READING, MA

David L. Hoffman, FAIA
Architect

David L. Hoffman, FAIA ©
Architect
345 Riverview Wichita, KS 67203
T 316.268.0230 F316.268.0205
CONTACT: Dan Dokken

DRAWN: PDF
CHECKED:
PROJECT NUMBER:

SHEET TITLE:
EXTERIOR ELEVATIONS

SHEET NUMBER:
A2.1 OF: ?

Jun 03, 2013 – 11:58am – USER pfolger
\Healthcare\11614-ArtisSeniorLiving Concept\Prototypes\Reading, MA\2013.05.28 For City\A-2 Reading.dwg