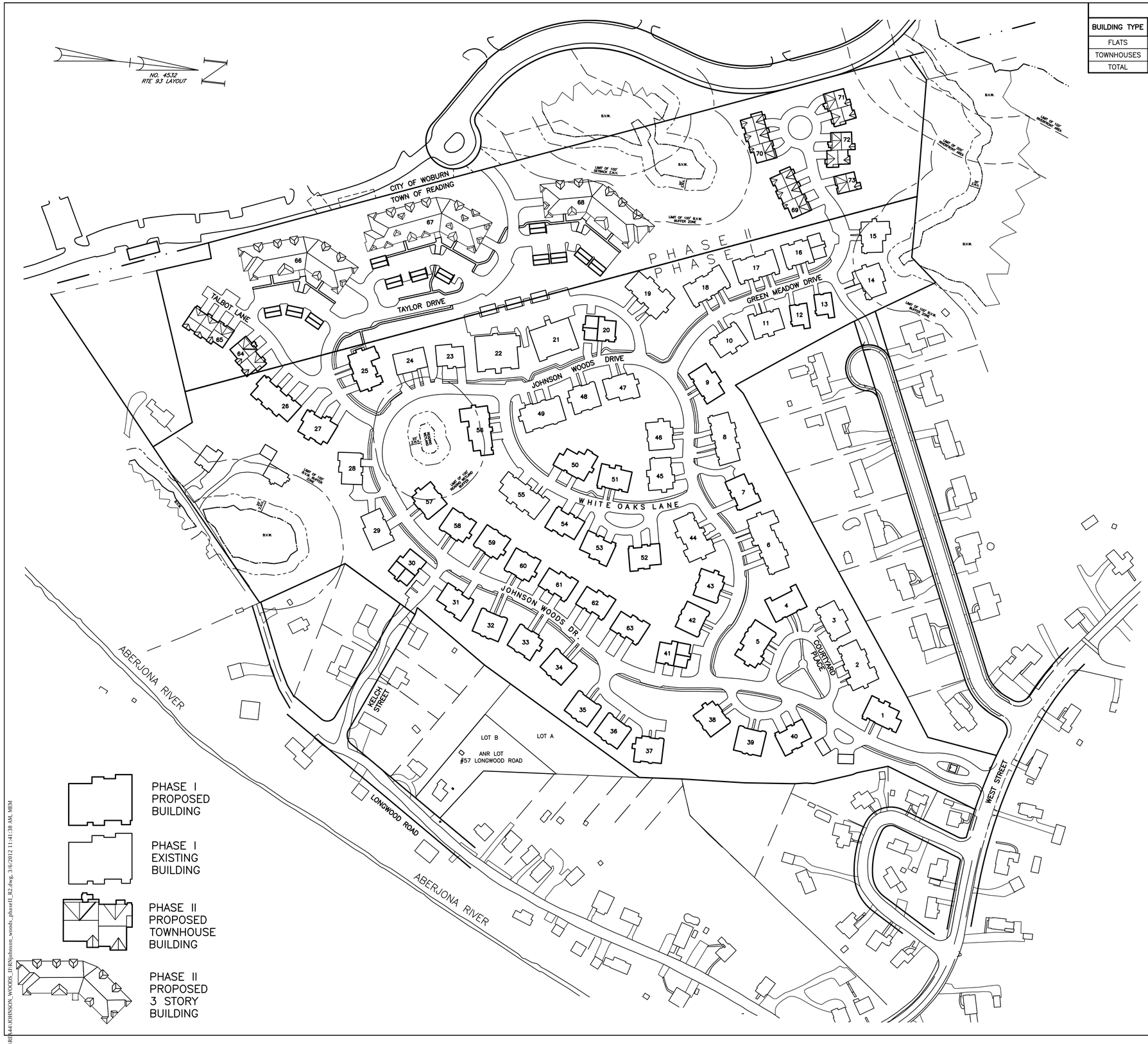

PHASE II PARKING TABLE

BUILDING TYPE	NO. OF UNITS	REQUIRED PARKING	PROVIDED SURFACE PARKING	PROVIDED GARAGE PARKING	SUBTOTAL PROVIDED PARKING
FLATS	111	(111)*(2)=222	70	166	236
TOWNHOUSES	16	(16)*(2)=32	24	24	48
TOTAL	127	254	94	190	284

PLAN INDEX

PLAN TITLE	SHEET DESIGNATION
SITE INDEX PLAN	C1 OF 22
EXISTING CONDITION PLAN	C2 OF 22
EXISTING CONDITION PLAN	C3 OF 22
SITE GRADING PLAN	C4 OF 22
SITE GRADING PLAN	C5 OF 22
SITE UTILITY PLAN	C6 OF 22
SITE UTILITY PLAN	C7 OF 22
SITE ROOF DRAIN UTILITY PLAN	C8 OF 22
SITE LAYOUT PLAN	C9 OF 22
SITE LAYOUT PLAN	C10 OF 22
PLAN & PROFILE TAYLOR DR.	C11 OF 22
PLAN & PROFILE TREVOR LN./GREEN MEADOW DR.	C12 OF 22
PLAN & PROFILE X-COUNTRY SEWER	C13 OF 22
PLAN & PROFILE MISCELLANEOUS	C14 OF 22
PHOTOMETRIC PLAN	C15 OF 22
PHOTOMETRIC PLAN	C16 OF 22
SURVEY PLAN	C17 OF 22
SITE DETAILS PLAN	C18 OF 22
SITE DETAILS PLAN	C19 OF 22
SITE DETAILS PLAN	C20 OF 22
SITE DETAILS PLAN	C21 OF 22
SITE DETAILS PLAN	C22 OF 22
GARDEN STYLE BUILDING FLOOR PLANS	A1
GARDEN STYLE BUILDING ELEVATIONS / SECTION	A2
TOWNHOUSE AND DETACHED GARAGE PLANS	A3
SHADOW STUDY	S1
FITNESS COURSE STATIONS	S2
LANDSCAPE PLAN	L1
ILLUSTRATIVE SITE PLAN	L2

ZONING TABLE

ZONE	PUD-R	
DIMENSIONAL CONTROLS	REQUIRED/ALLOWED	PROPOSED
MIN. SETBACK PARCEL BOUNDARY	20 ft. *	> 20 ft.
MIN SETBACK 30 ft. & 35 ft. HEIGHT	40 ft. *	> 40 ft.
MIN. SETBACK > 35 ft. HEIGHT	50 ft. *	> 50 ft.
MIN. DISTANCE BETWEEN BLDGS.	15 ft.	> 15 ft.
MIN. LOT AREA	10 Ac.	Phase I=27.8 Ac. Phase II=11.6 Ac. Total=39.4 Ac.
MAX. BUILDING HEIGHT	70 ft. **	47± ft.
MAX. INTENSITY OF USE (PHASE II)	127 units ***	127 units
MIN. AFFORDABLE UNITS	19 units	19 units
MIN. OPEN SPACE	25 %	> 50%
MIN. RECREATION AREA	15 %	17 %
PARKING (see phase II parking table)	254	284

* MINIMUM RESIDENTIAL SETBACKS:
ALL DWELLINGS WITHIN A PUD-R SHALL BE AT LEAST 20 FEET FROM THE PUD-R PARCEL BOUNDARY EXCEPT THAT A DWELLING THAT IS BETWEEN 30 AND 35 FEET IN HEIGHT MUST BE AT LEAST 40 FEET FROM THE PUD-R PARCEL BOUNDARY (EXCLUDING A PARCEL BOUNDARY THAT IS ALSO A TOWN BOUNDARY) AND A DWELLING THAT IS OVER 35 FEET IN HEIGHT MUST BE AT LEAST 50 FEET FROM THE PUD-R PARCEL BOUNDARY (EXCLUDING A PARCEL BOUNDARY THAT IS ALSO A TOWN BOUNDARY).

** MAXIMUM BUILDING HEIGHT:
THE MAXIMUM BUILDING HEIGHT AS TO A DWELLING SHALL BE 30 FEET EXCEPT THAT A DWELLING THAT IS MORE THAN 50 FEET FROM THE PUD-R PARCEL BOUNDARY MAY BE 35 FEET IN HEIGHT AND A DWELLING THAT IS AT LEAST 150 FEET FROM DWELLINGS THAT ARE OUTSIDE OF A PUD AND IN EXISTENCE AT THE TIME OF PRELIMINARY PUD PLAN SUBMISSION, MAY HAVE A MAXIMUM HEIGHT OF 40 FEET, EXCEPTING THAT A DWELLING THAT IS WITHIN 300 FEET OF THE TOWN BOUNDARY MAY HAVE A MAXIMUM HEIGHT OF 70 FEET.

*** MINIMUM INTENSITY OF RESIDENTIAL USE:
6 UNITS PER ACRE GREATER THAN 300 FEET FROM MUNICIPAL BOUNDARY.
11 UNITS PER ACRE WITHIN 300 FEET FROM MUNICIPAL BOUNDARY.

PROJECT NOTES:

1. RESOURCE AREAS SHOWN WERE DETERMINED UNDER CURRENT ACTIVE ORDER OF CONDITIONS DEP 270-424, RGB 2004-10.

Prepared For:

Owner / Applicant
Johnson Woods Realty Corp.
c/o Glover Property Management, Inc.
8 Dooks Lane
Marblehead, MA 01945

Prepared By:

Hayes Engineering, Inc.
15 Constitution Blvd.
Wakefield, MA 01880
Ph: 781.246.2800
Fax: 781.246.7596
www.hayeseng.com

Design By: xxx
Drawn By: MEM
Checked By: WRB
Project File: REA-0316
Comp. No: REA44

- [x] Issued For Permit
- [ ] Issued For Review
- [ ] Issued For Bid
- [ ] Issued For Construction
- [ ] Not For Construction

No.	Revision	Date
10		
9		
8		
7		
6		
5		
4		
3	Reprinted, No Changes	03/02/2012
2	Town Comments	12/19/2011
1		

Scale: 1"= 100'
0' 50' 100' 200'

Date: October 6, 2011

SITE INDEX PLAN
JOHNSON WOODS
PLANNED UNIT DEVELOPMENT
(PHASE II)
READING, MASS.

COMMONWEALTH OF MASSACHUSETTS
William R. Bergeron
CIVIL
No. 34052
REGISTERED PROFESSIONAL ENGINEER

William R. Bergeron, P.E.
2/29/2012

Drawing No.:
C1

SHEET 1 OF 22

N:\REA44\JOHNSON_WOODS_II\RNjohnson_woods_phaseII_R2.dwg, 3/6/2012 11:41:38 AM, MEM

Prepared For:

Owner / Applicant

Johnson Woods Realty Corp.
c/o Glover Property Management, Inc.
8 Doaks Lane
Marblehead, MA 01945

Prepared By:

Hayes Engineering, Inc.
603 Salem Street
Wakefield, MA 01880
Ph: 781.246.2800
Fax: 781.246.7596
www.hayeseng.com

Design By: xxx
Drawn By: MEM
Checked By: WRB
Project File: REA-0316
Comp. No: REA44

- [x] Issued For Permit
- [ ] Issued For Review
- [ ] Issued For Bid
- [ ] Issued For Construction
- [ ] Not For Construction

No.	Revision	Date
10		
9		
8		
7		
6		
5		
4		
3		
2	Reprinted, No Changes	03/02/2012
1	Town Comments	12/19/2011

Scale: 1" = 40'
0' 20' 40' 80'

Date: October 6, 2011

EXISTING CONDITION PLAN
JOHNSON WOODS
PLANNED UNIT DEVELOPMENT
(PHASE II)
READING, MASS.

Drawing No.:

C2

SHEET 2 OF 22

N:\REA44\JOHNSON_WOODS_II\SPjohnson_woods_phaseII_R4.dwg, 3/6/2012 11:33:58 AM, MEM

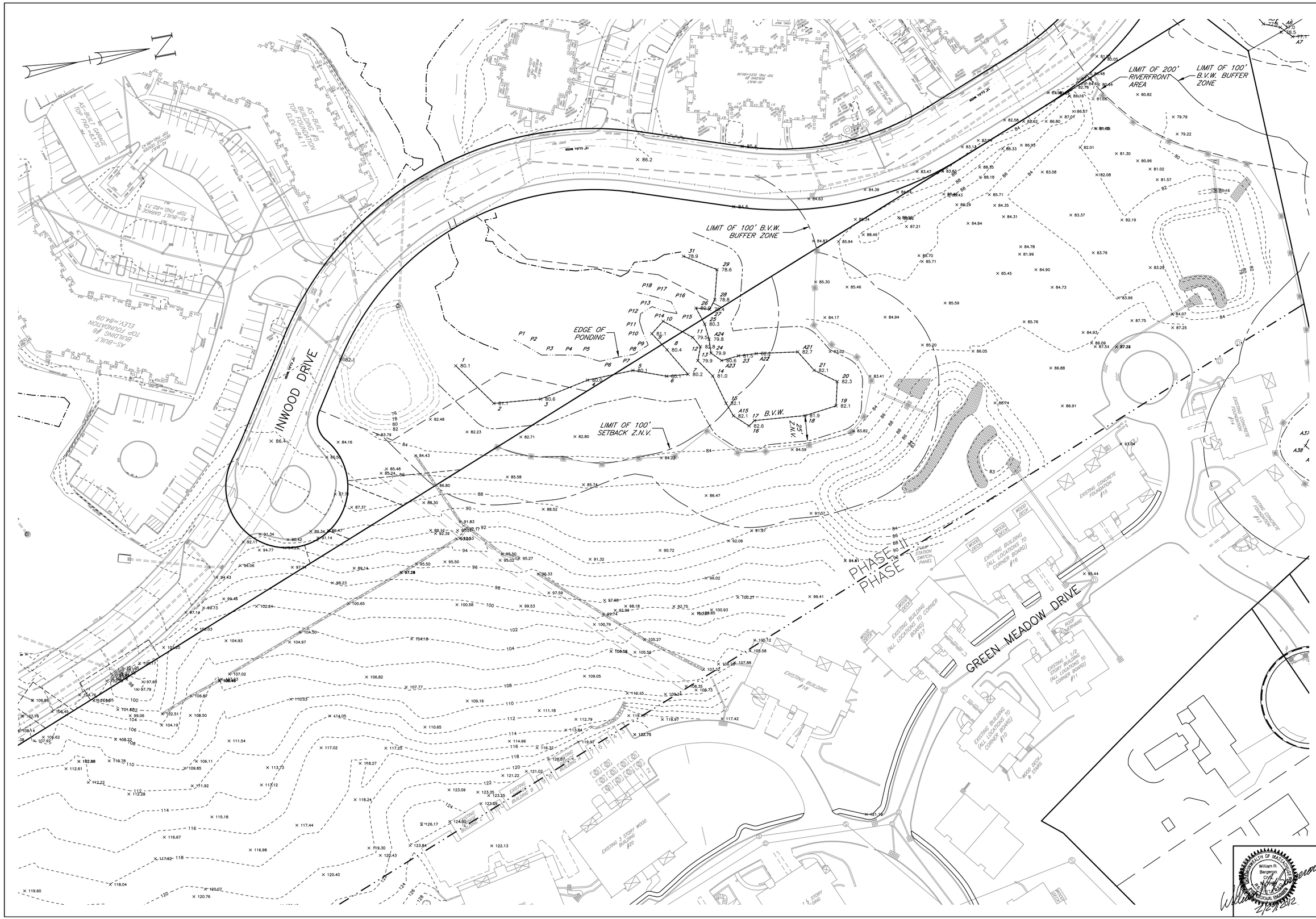

Prepared For:

Owner / Applicant

Johnson Woods Realty Corp.
c/o Glover Property Management, Inc.
8 Oaks Lane
Marblehead, MA 01945

Prepared By:

Hayes Engineering, Inc.
95 Santilli Highway
Wakefield, MA 01880
Ph: 781.246.2800
Fax: 781.246.7596
www.hayeseng.com

Design By: xxx
Drawn By: MEM
Checked By: WRB
Project File: REA-0316
Comp. No: REA44

- [x] Issued For Permit
- [ ] Issued For Review
- [ ] Issued For Bid
- [ ] Issued For Construction
- [ ] Not For Construction

No.	Revision	Date
10		
9		
8		
7		
6		
5		
4		
3		
2	Reprinted, No Changes	03/02/2012
1	Town Comments	12/19/2011

Scale: 1"= 40'

0' 20' 40' 80'

Date: October 6, 2011

EXISTING CONDITION PLAN
JOHNSON WOODS
PLANNED UNIT DEVELOPMENT
(PHASE II)
READING, MASS.

COMMONWEALTH OF MASSACHUSETTS
William R. Bergeron
No. 34757
REGISTERED PROFESSIONAL ENGINEER

2/29/2012

Drawing No.:

C3

SHEET 3 OF 22

N:\REA44\JOHNSON_WOODS_II\Johnson_woods_phaseII_R4.dwg, 3/6/2012 11:34:01 AM, MEM

LEGEND:

- EXISTING CONTOUR (128)
- EXISTING SPOT ELEVATION (× 79.7)
- EXISTING TREE LINE
- EDGE OF BORDERING VEGETATED WETLAND (BVW)
- EDGE OF 100' BUFFER FROM BVW
- EDGE OF 25' ZONE OF NATURAL VEGETATION
- EXISTING DRAIN
- EXISTING CATCH BASIN
- EXISTING SEWER
- PROPOSED CONTOUR (116)
- PROPOSED SPOT ELEVATION (123.3)
- PROPOSED SURFACE DRAINAGE FLOW
- PROPOSED SILTATION CONTROL
- PROPOSED DRAIN
- PROPOSED CATCH BASIN
- PROPOSED SEWER

Prepared For:

Owner / Applicant

Johnson Woods Realty Corp.
c/o Glover Property
Management, Inc.
8 Doaks Lane
Marblehead, MA 01945

Prepared By:

Hayes Engineering, Inc.
15 Constitution Blvd.
Wakefield, MA 01880
Ph: 781.246.2800
Fax: 781.246.7596
www.hayeseng.com

Design By:	xxx
Drawn By:	MEM
Checked By:	WRB
Project File:	REA–0316
Comp. No:	REA44

- [x] Issued For Permit
- [ ] Issued For Review
- [ ] Issued For Bid
- [ ] Issued For Construction
- [ ] Not For Construction

No.	Revision	Date
10		
9		
8		
7		
6		
5		
4		
3	Town Comments	03/02/2012
2	Town Comments	12/19/2011
1		

Scale: 1" = 40'
0' 20' 40' 80'

Date: October 6, 2011

SITE GRADING PLAN
JOHNSON WOODS
PLANNED UNIT DEVELOPMENT
(PHASE II)
READING, MASS.

COMMONWEALTH OF MASSACHUSETTS
William R. Bergeron
Civil
No. 34756
REGISTERED PROFESSIONAL ENGINEER

William R. Bergeron, P.E.
2/29/2012

Drawing No.:

C4

SHEET 4 OF 22

N:\REA44\JOHNSON_WOODS_II\SP\johnson_woods_phaseII_R4.dwg, 3/6/2012 11:34:06 AM, MEM

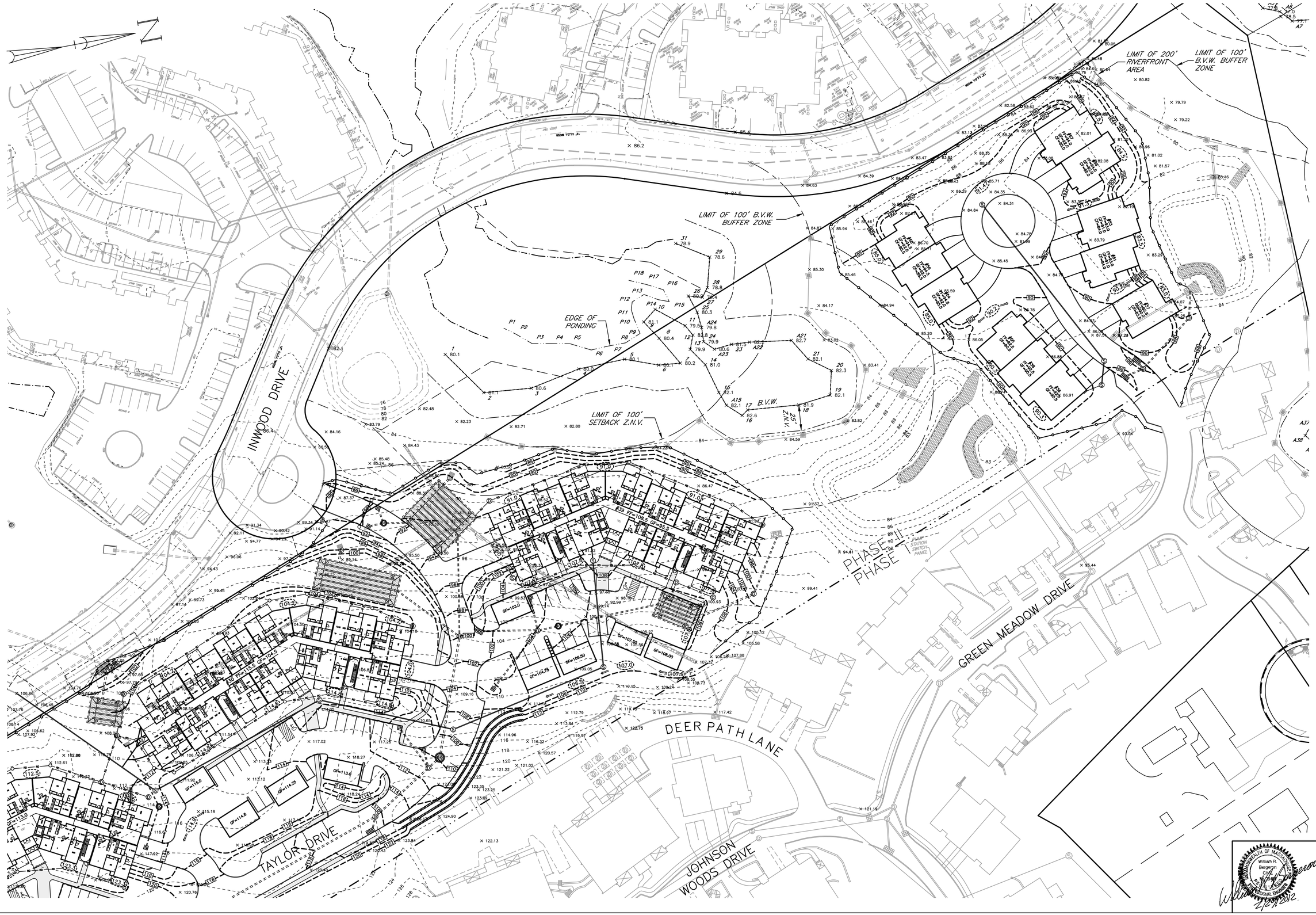

Prepared For:

Owner / Applicant

Johnson Woods Realty Corp.
c/o Glover Property Management, Inc.
8 Dooks Lane
Marblehead, MA 01945

Prepared By:

Hayes Engineering, Inc.
95 Sanderson Street
Wakefield, MA 01880
Ph: 781.246.2800
Fax: 781.246.7596
www.hayeseng.com

Design By:	xxx
Drawn By:	MEM
Checked By:	WRB
Project File:	REA-0316
Comp. No:	REA44

- ☒ Issued For Permit
- ☐ Issued For Review
- ☐ Issued For Bid
- ☐ Issued For Construction
- ☐ Not For Construction

No.	Revision	Date
10		
9		
8		
7		
6		
5		
4		
3		
2	Town Comments	03/02/2012
1	Town Comments	12/19/2011

Scale: 1" = 40'

0' 20' 40' 80'

Date: October 6, 2011

SITE GRADING PLAN
JOHNSON WOODS
PLANNED UNIT DEVELOPMENT
(PHASE II)
READING, MASS.

COMMONWEALTH OF MASSACHUSETTS
William R. Bergmann
No. 37167
REGISTERED PROFESSIONAL ENGINEER

William R. Bergmann, P.E.
2/29/2012

Drawing No.:

C5

SHEET 5 OF 22

N:\REA44\JOHNSON_WOODS_II\SPjohnson_woods_phaseII_R4.dwg, 3/6/2012 11:34:11 AM, MEM

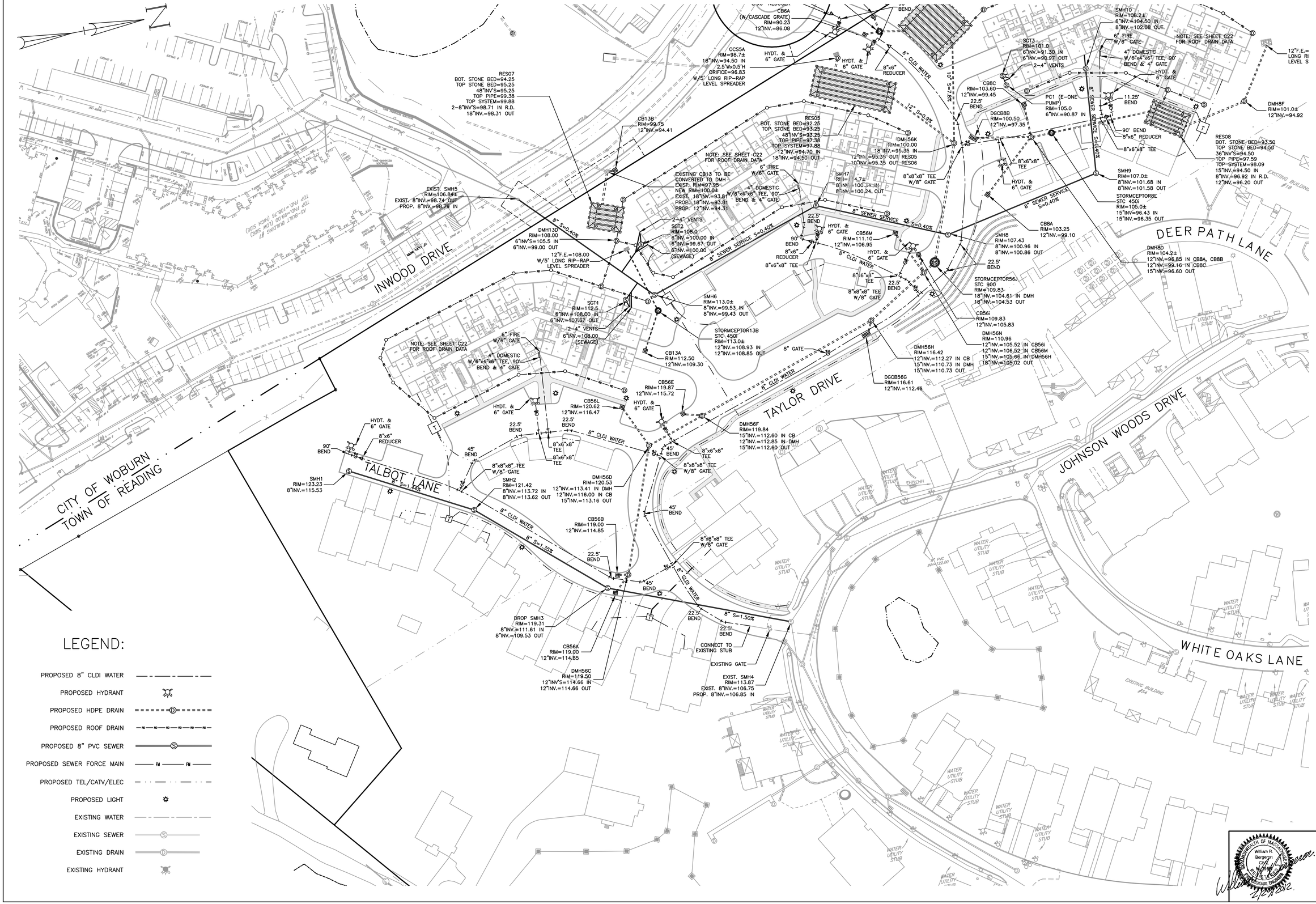

LEGEND:

- PROPOSED 8" CLDI WATER
- PROPOSED HYDRANT
- PROPOSED HDPE DRAIN
- PROPOSED ROOF DRAIN
- PROPOSED 8" PVC SEWER
- PROPOSED SEWER FORCE MAIN
- PROPOSED TEL/CATV/ELEC
- PROPOSED LIGHT
- EXISTING WATER
- EXISTING SEWER
- EXISTING DRAIN
- EXISTING HYDRANT

Prepared For:

Owner / Applicant

Johnson Woods Realty Corp.
c/o Glover Property
Management, Inc.
8 Oaks Lane
Marblehead, MA 01945

Prepared By:

Hayes Engineering, Inc.
45 Bristol Drive
Wakefield, MA 01880
Ph: 781.246.2800
Fax: 781.246.7596
www.hayseeng.com

Design By:	xxx
Drawn By:	MEM
Checked By:	WRB
Project File:	REA-0316
Comp. No:	REA44

- [x] Issued For Permit
- [ ] Issued For Review
- [ ] Issued For Bid
- [ ] Issued For Construction
- [ ] Not For Construction

No.	Revision	Date
10		
9		
8		
7		
6		
5		
4		
3		
2	Town Comments	03/02/2012
1	Town Comments	12/19/2011

Scale: 1" = 40'
0' 20' 40' 80'

Date: October 6, 2011

SITE UTILITY PLAN
JOHNSON WOODS
PLANNED UNIT DEVELOPMENT
(PHASE II)
READING, MASS.

COMMONWEALTH OF MASSACHUSETTS
William R. Bergeron
CIVIL
No. 34997
PROFESSIONAL ENGINEER
3/6/2012

Drawing No.:

C6

SHEET 6 OF 22

N:\REA44\JOHNSON_WOODS_II\SP\johnson_woods_phaseII_R4.dwg, 3/6/2012 11:34:16 AM, MEM

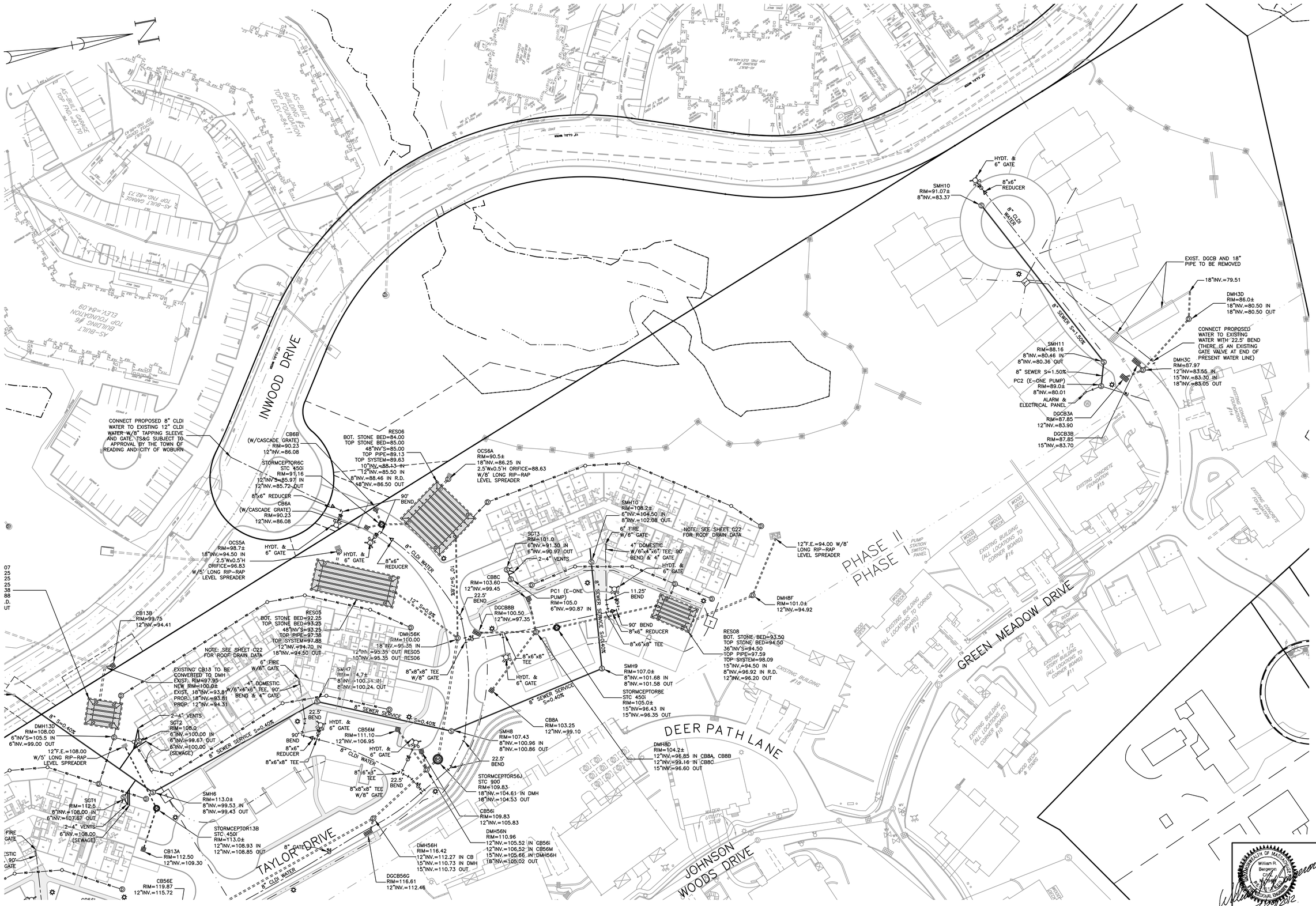

Prepared For:

Owner / Applicant

Johnson Woods Realty Corp.
c/o Glover Property
Management, Inc.
8 Dooks Lane
Marblehead, MA 01945

Prepared By:

Hayes Engineering, Inc.
95 Sanderson Street
Wakefield, MA 01880
Ph: 781.246.2800
Fax: 781.246.7596
www.hayeseng.com

Design By:	xxx
Drawn By:	MEM
Checked By:	WRB
Project File:	REA-0316
Comp. No:	REA44

- [x] Issued For Permit
- [ ] Issued For Review
- [ ] Issued For Bid
- [ ] Issued For Construction
- [ ] Not For Construction

No.	Revision	Date
10		
9		
8		
7		
6		
5		
4		
3	Town Comments	03/02/2012
2	Town Comments	12/19/2011
1		

Scale: 1"= 40'
0' 20' 40' 80'

Date: October 6, 2011

SITE UTILITY PLAN
JOHNSON WOODS
PLANNED UNIT DEVELOPMENT
(PHASE II)
READING, MASS.

COMMONWEALTH OF MASSACHUSETTS
William R. Bergeron
No. 34,767
PROFESSIONAL ENGINEER
3/2/2012

Drawing No.:

C7

SHEET 7 OF 22

N:\REA44\JOHNSON_WOODS_II\SPjohnson_woods_phaseII_R4.dwg, 3/6/2012 11:34:21 AM, MEM

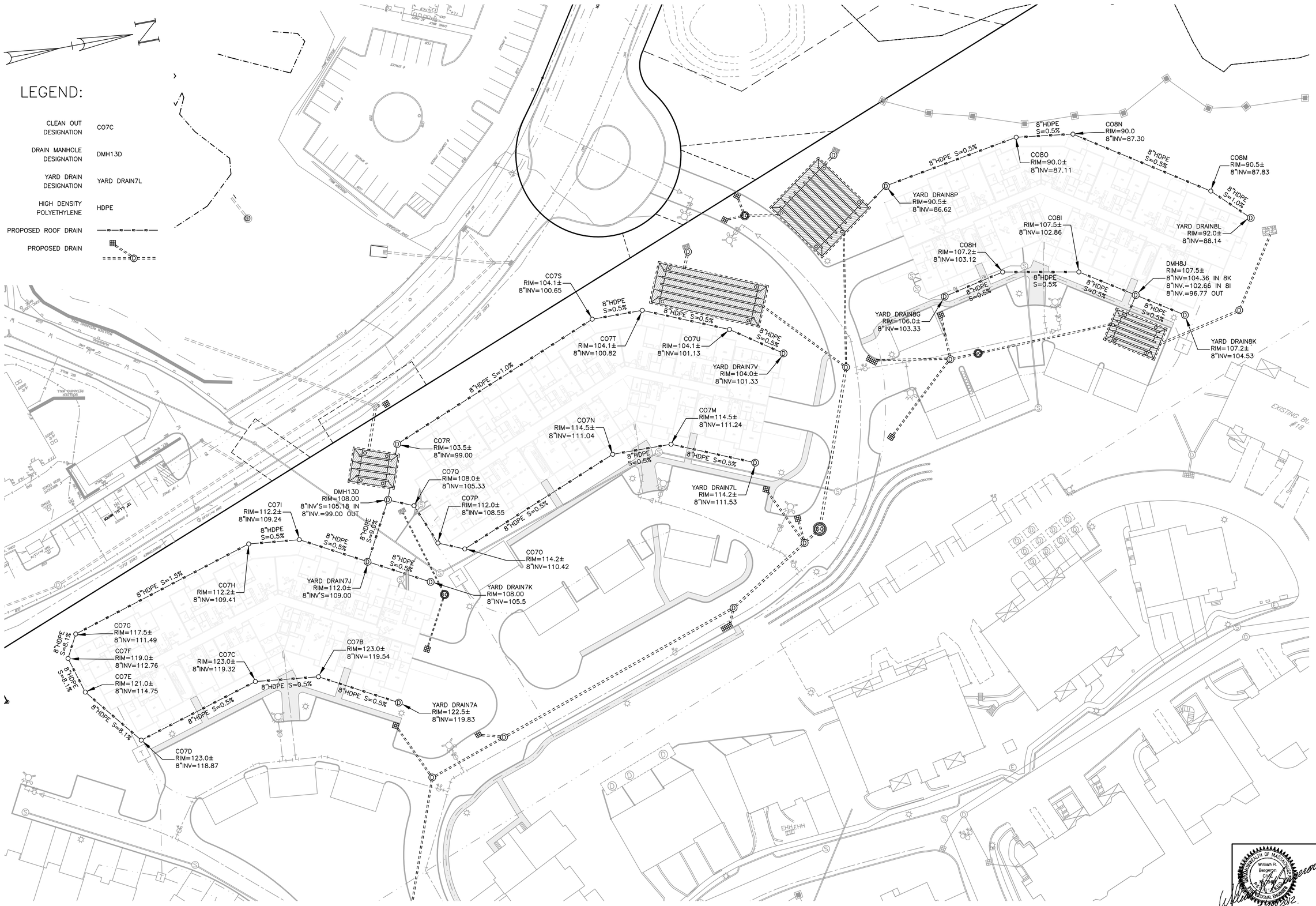

Prepared For:

Owner / Applicant

Johnson Woods Realty Corp.
c/o Glover Property Management, Inc.
8 Doaks Lane
Marblehead, MA 01945

Prepared By:

Hayes Engineering, Inc.
603 Salem Street
Wakefield, MA 01880
Ph: 781.246.2800
Fax: 781.246.7596
www.hayeseng.com

Design By: xxx
Drawn By: MEM
Checked By: WRB
Project File: REA-0316
Comp. No: REA44

- [x] Issued For Permit
- [ ] Issued For Review
- [ ] Issued For Bid
- [ ] Issued For Construction
- [ ] Not For Construction

No.	Revision	Date
1	Town Comments	12/19/2011
2	Town Comments	03/02/2012
3		
4		
5		
6		
7		
8		
9		
10		

Scale: 1"= 30'
0' 15' 30' 60'

Date: October 6, 2011

SITE ROOF DRAIN UTILITY PLAN
JOHNSON WOODS
PLANNED UNIT DEVELOPMENT (PHASE II)
READING, MASS.

Drawing No.:

C8

SHEET C8 OF 22

William R. Bergeron, P.E.
2/29/2012

N:\REA44\JOHNSON_WOODS_II\SPjohnson_woods_phaseII_R4.dwg, 3/6/2012 11:34:26 AM, MEM

PLAN INDEX

PLAN TITLE	SHEET DESIGNATION
SITE INDEX PLAN	C1 OF 22
EXISTING CONDITION PLAN	C2 OF 22
EXISTING CONDITION PLAN	C3 OF 22
SITE GRADING PLAN	C4 OF 22
SITE GRADING PLAN	C5 OF 22
SITE UTILITY PLAN	C6 OF 22
SITE UTILITY PLAN	C7 OF 22
SITE ROOF DRAIN UTILITY PLAN	C8 OF 22
SITE LAYOUT PLAN	C9 OF 22
SITE LAYOUT PLAN	C10 OF 22
PLAN & PROFILE TAYLOR DR.	C11 OF 22
PLAN & PROFILE TREVOR LN./GREEN MEADOW DR.	C12 OF 22
PLAN & PROFILE X-COUNTRY SEWER	C13 OF 22
PLAN & PROFILE MISCELLANEOUS	C14 OF 22
PHOTOMETRIC PLAN	C15 OF 22
PHOTOMETRIC PLAN	C16 OF 22
SURVEY PLAN	C17 OF 22
SITE DETAILS PLAN	C18 OF 22
SITE DETAILS PLAN	C19 OF 22
SITE DETAILS PLAN	C20 OF 22
SITE DETAILS PLAN	C21 OF 22
SITE DETAILS PLAN	C22 OF 22
GARDEN STYLE BUILDING FLOOR PLANS	A1
GARDEN STYLE BUILDING ELEVATIONS / SECTION	A2
TOWNHOUSE AND DETACHED GARAGE PLANS	A3
SHADOW STUDY	S1
FITNESS COURSE STATIONS	S2
LANDSCAPE PLAN	L1
ILLUSTRATIVE SITE PLAN	L2

ZONING TABLE

ZONE	PUD-R	
DIMENSIONAL CONTROLS	**REQUIRED/ALLOWED**	**PROPOSED**
MIN. SETBACK PARCEL BOUNDARY	20 ft. *	> 20 ft.
MIN SETBACK 30 ft. & 35 ft. HEIGHT	40 ft. *	> 40 ft.
MIN. SETBACK > 35 ft. HEIGHT	50 ft. *	> 50 ft.
MIN. DISTANCE BETWEEN BLDGS.	15 ft.	> 15 ft.
MIN. LOT AREA	10 Ac.	Phase I=27.8 Ac. Phase II=11.6 Ac. Total=39.4 Ac.
MAX. BUILDING HEIGHT	70 ft. **	47± ft.
MAX. INTENSITY OF USE (PHASE II)	127 units ***	127 units
MIN. AFFORDABLE UNITS	19 units	19 units
MIN. OPEN SPACE	25 %	> 50%
MIN. RECREATION AREA	15 %	17 %
PARKING (see phase II parking table)	254	284

* MINIMUM RESIDENTIAL SETBACKS:
ALL DWELLINGS WITHIN A PUD-R SHALL BE AT LEAST 20 FEET FROM THE PUD-R PARCEL BOUNDARY EXCEPT THAT A DWELLING THAT IS BETWEEN 30 AND 35 FEET IN HEIGHT MUST BE AT LEAST 40 FEET FROM THE PUD-R PARCEL BOUNDARY (EXCLUDING A PARCEL BOUNDARY THAT IS ALSO A TOWN BOUNDARY) AND A DWELLING THAT IS OVER 35 FEET IN HEIGHT MUST BE AT LEAST 50 FEET FROM THE PUD-R PARCEL BOUNDARY (EXCLUDING A PARCEL BOUNDARY THAT IS ALSO A TOWN BOUNDARY).

** MAXIMUM BUILDING HEIGHT:
THE MAXIMUM BUILDING HEIGHT AS TO A DWELLING SHALL BE 30 FEET EXCEPT THAT A DWELLING THAT IS MORE THAN 50 FEET FROM THE PUD-R PARCEL BOUNDARY MAY BE 35 FEET IN HEIGHT AND A DWELLING THAT IS AT LEAST 150 FEET FROM DWELLINGS THAT ARE OUTSIDE OF A PUD AND IN EXISTENCE AT THE TIME OF PRELIMINARY PUD PLAN SUBMISSION, MAY HAVE A MAXIMUM HEIGHT OF 40 FEET, EXCEPTING THAT A DWELLING THAT IS WITHIN 300 FEET OF THE TOWN BOUNDARY MAY HAVE A MAXIMUM HEIGHT OF 70 FEET.

*** MINIMUM INTENSITY OF RESIDENTIAL USE:
6 UNITS PER ACRE GREATER THAN 300 FEET FROM MUNICIPAL BOUNDARY.
11 UNITS PER ACRE WITHIN 300 FEET FROM MUNICIPAL BOUNDARY.

NOTES:

1. ALL PROPOSED CURBING TO BE SLOPED GRANITE CURB.
2. ALL REGULAR SURFACE PARKING SPACES SHALL BE 9'x18'.
3. ALL ACCESSIBLE SURFACE PARKING SPACES AND ACCESS AISLES SHALL BE 8'x18'
4. IRRIGATION WELL LOCATION SHALL BE DETERMINED LATER IN CONCERT WITH THE BOARD OF HEALTH.

PHASE II PARKING TABLE

BUILDING TYPE	NO. OF UNITS	REQUIRED PARKING	PROVIDED SURFACE PARKING	PROVIDED GARAGE PARKING	SUBTOTAL PROVIDED PARKING
FLATS	111	(111)*(2)=222	70	166	236
TOWNHOUSES	16	(16)*(2)=32	24	24	48
TOTAL	127	254	94	190	284

Prepared For:

Owner / Applicant
Johnson Woods Realty Corp.
c/o Glover Property Management, Inc.
8 Dooks Lane
Marblehead, MA 01945

Prepared By:
Hayes Engineering, Inc.
95 Sylvan Street
Wakefield, MA 01880
Ph: 781.246.2800
Fax: 781.246.7596
www.hayeseng.com

Design By: xxx
Drawn By: MEM
Checked By: WRB
Project File: REA-0316
Comp. No: REA44
☒ Issued For Permit
☐ Issued For Review
☐ Issued For Bid
☐ Issued For Construction
☐ Not For Construction

No.	Revision	Town Comments	Date
10			
9			
8			
7			
6			
5			
4			
3			
2			
1			12/19/2011

Scale: 1"=40'
0' 20' 40' 80'
Date: October 6, 2011

SITE LAYOUT PLAN
JOHNSON WOODS
PLANNED UNIT DEVELOPMENT
(PHASE II)
READING, MASS.

COMMONWEALTH OF MASSACHUSETTS
William R. Bergeron
No. 29847
PROFESSIONAL ENGINEER
12/29/2011

Drawing No.:
C9
SHEET 9 OF 22

N:\REA44\JOHNSON_WOODS_II\Johnson_woods_phaseII_R4.dwg, 3/6/2012 11:34:31 AM, MEM

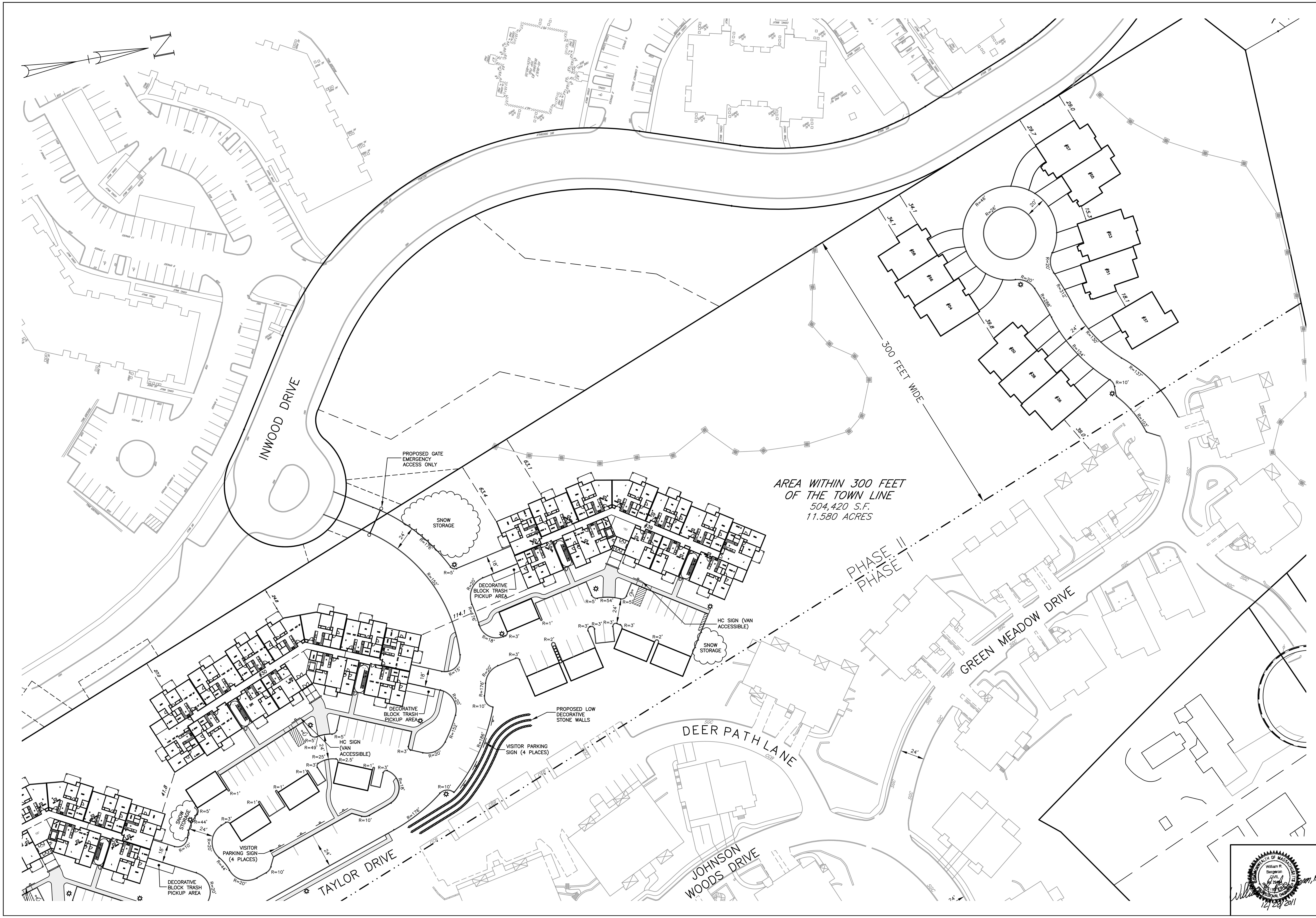

Prepared For:

Owner / Applicant

Johnson Woods Realty Corp.
c/o Glover Property Management, Inc.
8 Doaks Lane
Marblehead, MA 01945

Prepared By:

Hayes Engineering, Inc.
603 Salem Street
Wakefield, MA 01880
Ph: 781.246.2800
Fax: 781.246.7596
www.hayeseng.com

Design By: xxx
Drawn By: MEM
Checked By: WRB
Project File: REA-0316
Comp. No: REA44

☒ Issued For Permit
☐ Issued For Review
☐ Issued For Bid
☐ Issued For Construction
☐ Not For Construction

No.	Revision	Date
10		
9		
8		
7		
6		
5		
4		
3		
2		
1	Town Comments	12/19/2011

Scale: 1"= 40'
0' 20' 40' 80'

Date: October 6, 2011

SITE LAYOUT PLAN
JOHNSON WOODS
PLANNED UNIT DEVELOPMENT
(PHASE II)
READING, MASS.

COMMONWEALTH OF MASSACHUSETTS
William R. Bergeron
CIVIL
No. 29451
REGISTERED PROFESSIONAL ENGINEER
William R. Bergeron, P.E.
12/28/2011

Drawing No.:

C10

N:\REA44\JOHNSON_WOODS_II\SP\johnson_woods_phaseII_R4.dwg, 3/6/2012 11:34:36 AM, MEM

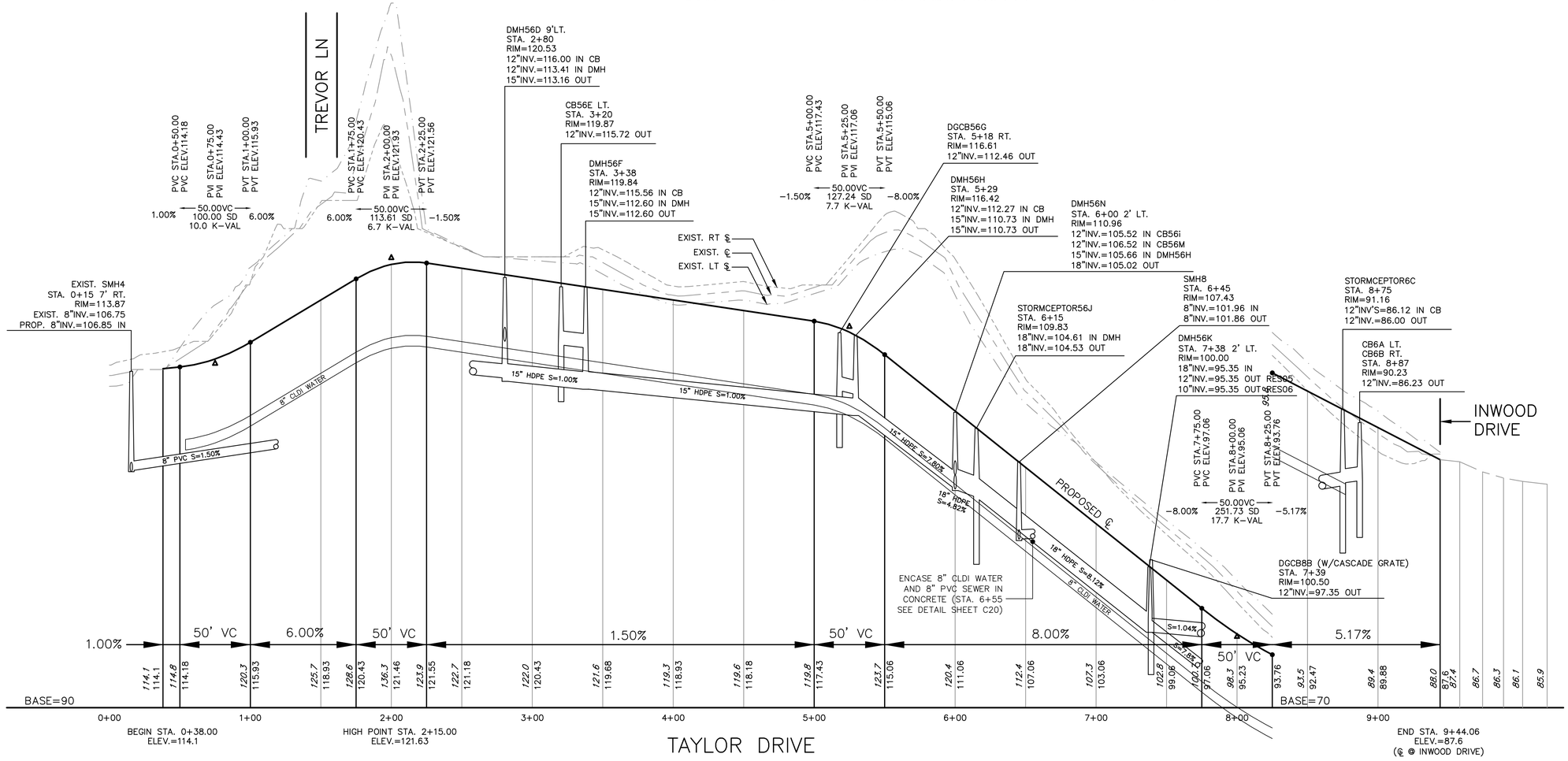

Prepared For:

Owner / Applicant

Johnson Woods Realty Corp.
c/o Glover Property
Management, Inc.
8 Dooks Lane
Marblehead, MA 01945

Prepared By:

Hayes Engineering, Inc.
65 South Street
Wakefield, MA 01880
Ph: 781.246.2800
Fax: 781.246.7596
www.hayeseng.com

Design By:	xxx
Drawn By:	MEM
Checked By:	WRB
Project File:	REA-0316
Comp. No:	REA44

- ☒ Issued For Permit
- ☐ Issued For Review
- ☐ Issued For Bid
- ☐ Issued For Construction
- ☐ Not For Construction

No.	Revision	Date
1	Town Comments	03/02/2012
2	Town Comments	12/19/2011
3		
4		
5		
6		
7		
8		
9		
10		

Scale: 1"= 40'
0' 20' 40' 80'

Date: October 6, 2011

PLAN & PROFILE TAYLOR DR.
JOHNSON WOODS
PLANNED UNIT DEVELOPMENT
(PHASE II)
READING, MASS.

COMMONWEALTH OF MASSACHUSETTS
William R. Bergengren
No. 34578
REGISTERED PROFESSIONAL ENGINEER

2/29/2012

Drawing No.:

C11

SHEET 11 OF 22

N:\REA44\JOHNSON_WOODS_II\SPjohnson_woods_phaseII_B4.dwg, 3/6/2012 11:34:41 AM, MEM

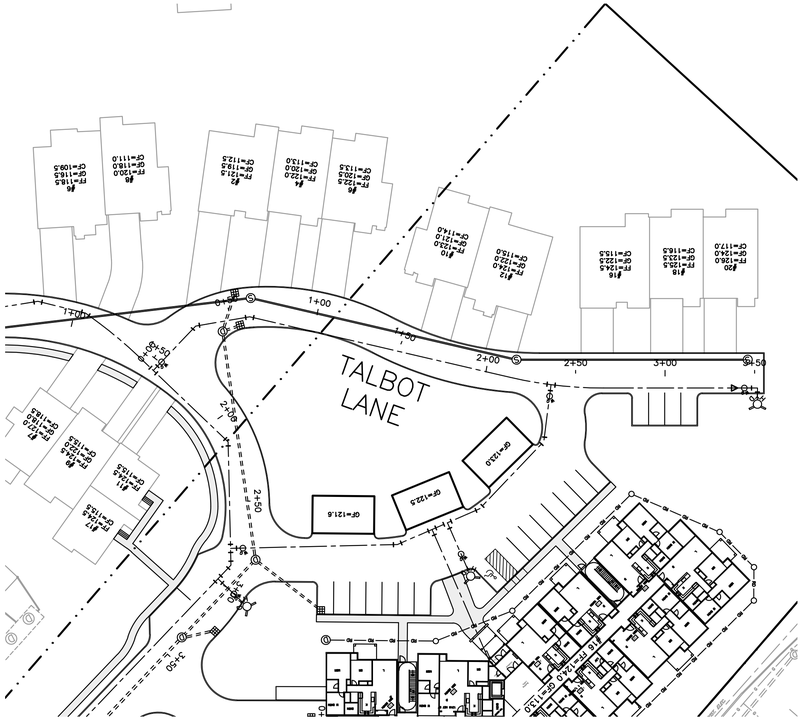

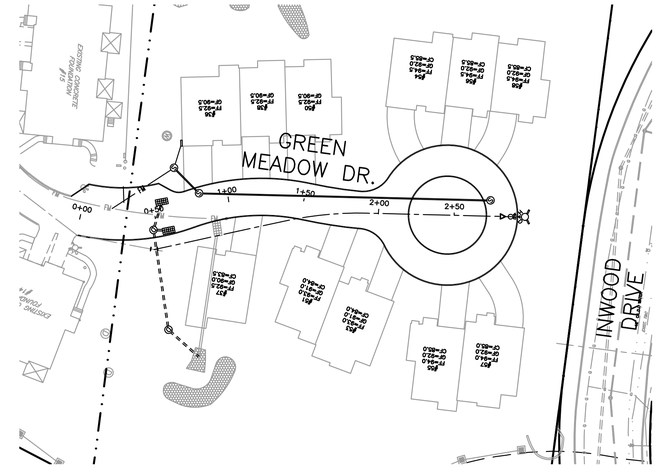

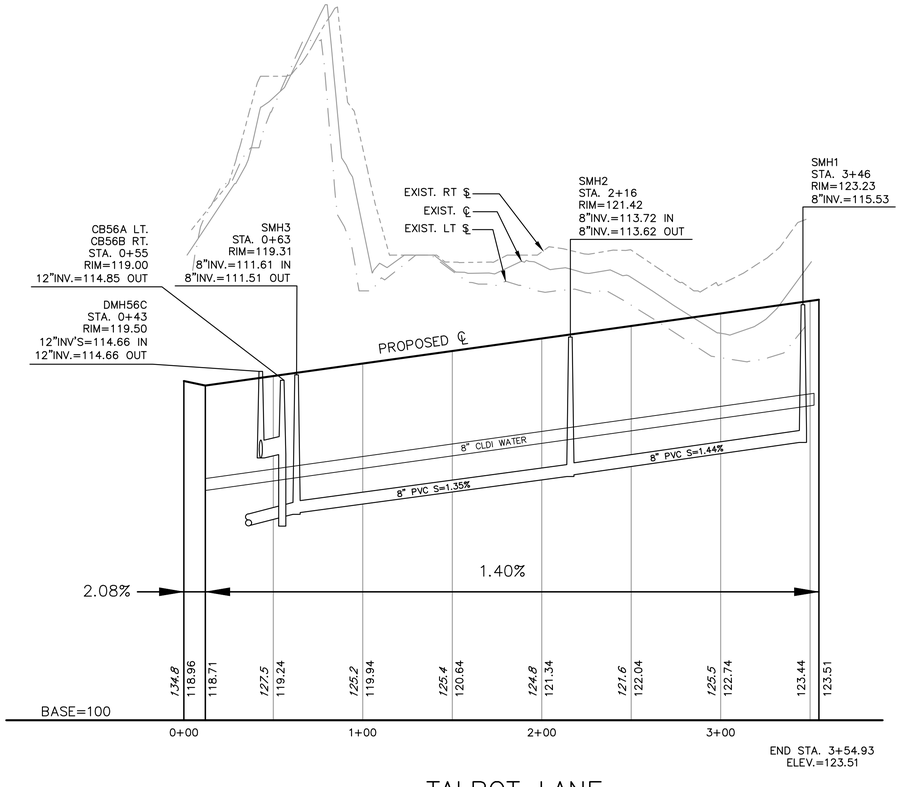

TALBOT LANE

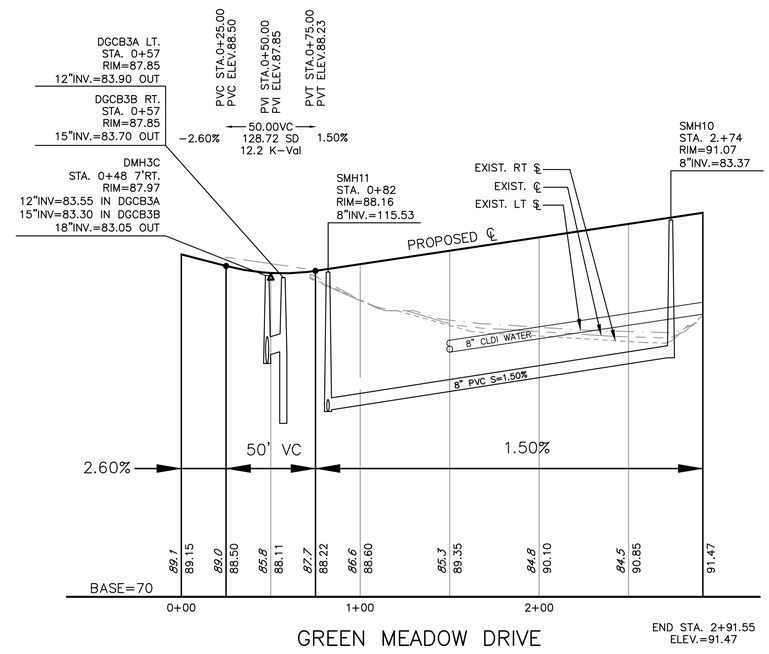

GREEN MEADOW DRIVE

Prepared For:

Owner / Applicant

Johnson Woods Realty Corp.
c/o Glover Property
Management, Inc.
8 Dooks Lane
Marblehead, MA 01945

Prepared By:

Hayes Engineering, Inc.
495 Commercial Street,
Wakefield, MA 01880
Ph: 781.246.2800
Fax: 781.246.7596
www.hayeseng.com

Design By:	xxx
Drawn By:	MEM
Checked By:	WRB
Project File:	REA-0316
Comp. No:	REA44

- ☒ Issued For Permit
- ☐ Issued For Review
- ☐ Issued For Bid
- ☐ Issued For Construction
- ☐ Not For Construction

No.	Revision	Date
10		
9		
8		
7		
6		
5		
4		
3	Town Comments	03/02/2012
2	Town Comments	12/19/2011
1		

Scale: 1" = 40'
0' 20' 40' 80'

Date: October 6, 2011

PLAN & PROFILE
TREVOR LN. / GREEN MEADOW DR.
JOHNSON WOODS
PLANNED UNIT DEVELOPMENT
(PHASE II)
READING, MASS.

COMMONWEALTH OF MASSACHUSETTS
William R. Bergeron
Civil
No. 34777
REGISTERED PROFESSIONAL ENGINEER

William R. Bergeron, P.E.
2/20/2012

Drawing No.:

C12

SHEET 12 OF 22

N:\REA44\JOHNSON_WOODS_II\SP\johnson_woods_phaseII_R4.dwg, 3/6/2012 11:34:47 AM, MEM

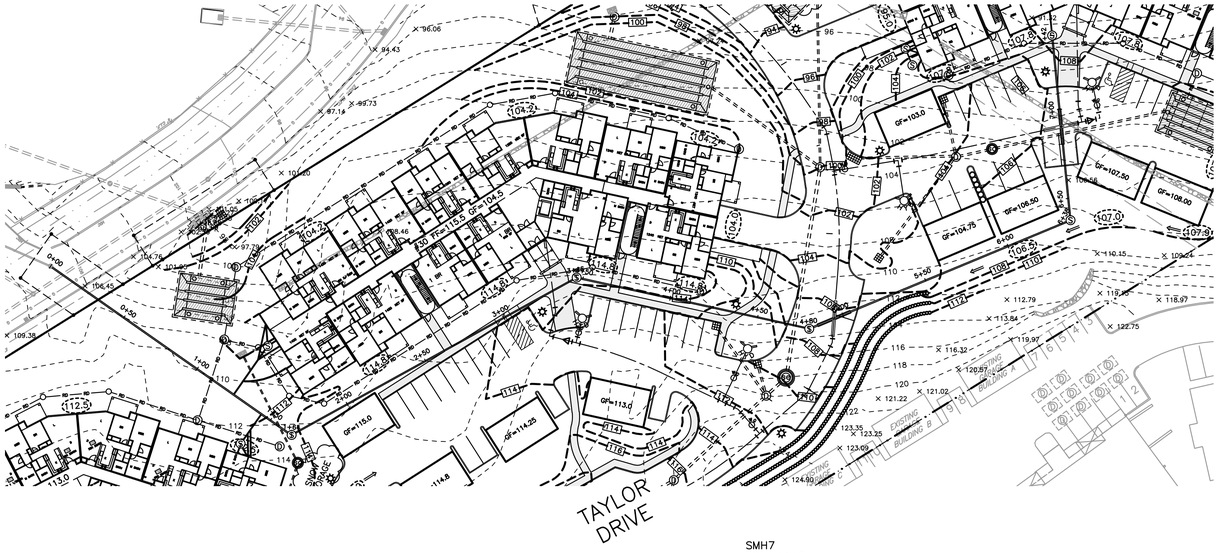

CONTRACTORS UTILITY NOTES:

1) THE UNDERGROUND UTILITIES SHOWN HAVE BEEN COMPILED FROM FIELD SURVEY INFORMATION AND AVAILABLE EXISTING DRAWINGS. THE SURVEYOR MAKES NO GUARANTEE THAT THE UNDERGROUND UTILITIES SHOWN COMPRISE ALL SUCH UTILITIES IN THE AREA, EITHER IN SERVICE OR ABANDONED. FURTHER, THE SURVEYOR HAS NOT PHYSICALLY LOCATED THE UNDERGROUND UTILITIES AND DOES NOT WARRANT THAT THE UNDERGROUND UTILITIES SHOWN ARE IN THE EXACT LOCATION INDICATED ALTHOUGH HE DOES CERTIFY THAT THEY ARE LOCATED AS ACCURATELY AS POSSIBLE FROM THE INFORMATION AVAILABLE.

2) THE CONTRACTORS SHALL BE RESPONSIBLE FOR CHECKING AND VERIFYING THE LOCATIONS, SIZES, AND ELEVATIONS OF ALL EXISTING UTILITIES SHOWN OR NOT SHOWN ON THESE PLANS AND SHALL NOTIFY THE ENGINEER IN WRITING OF ANY UTILITIES INTERFERING WITH THE PROPOSED DESIGN AND THE APPROPRIATE REMEDIAL ACTION PRIOR TO PROCEEDING WITH THE WORK.

3) THE CONTRACTORS ARE RESPONSIBLE FOR CONTACTING DIG SAFE AT (800) 322-4844 PRIOR TO THE START OF ANY CONSTRUCTION.

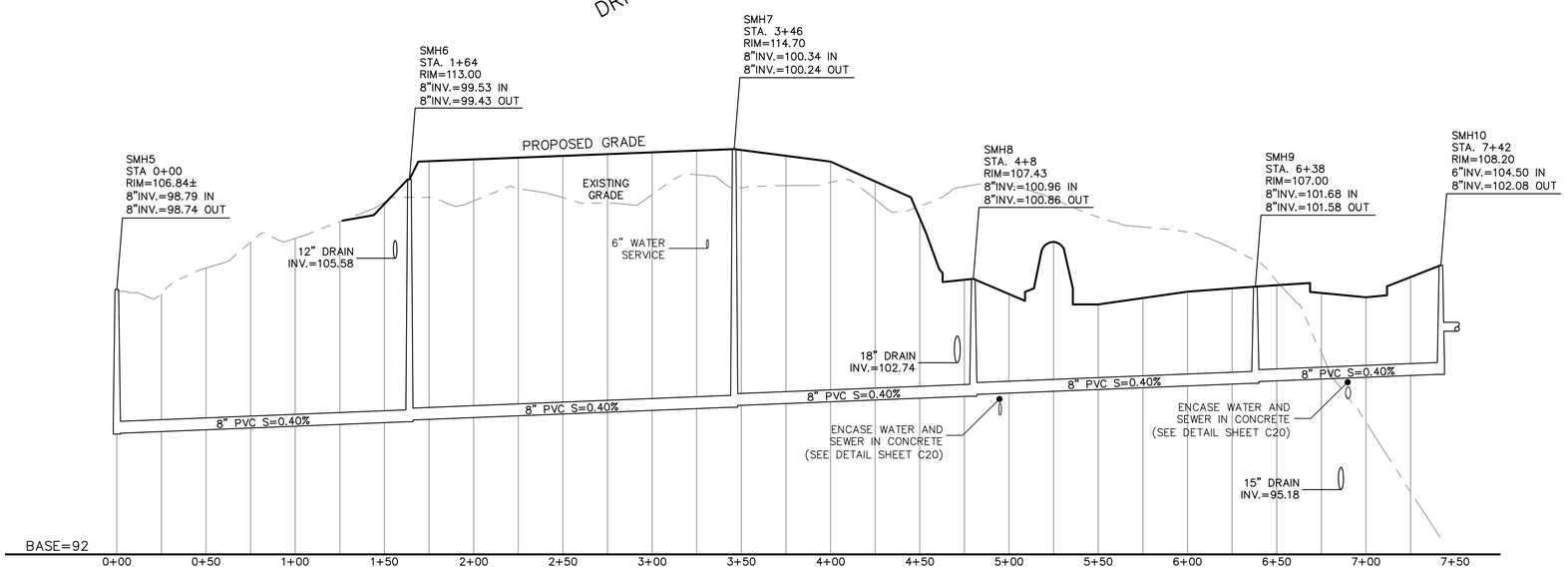

CROSS COUNTRY SEWER

Prepared For:

Owner / Applicant

Prepared By:

Hayes Engineering, Inc.
603 Salem Street
Wilmington, MA 01887
Ph: 781.246.2800
Fax: 781.246.7596
www.hayeseng.com

Design By:	xxx
Drawn By:	MEM
Checked By:	WRB
Project File:	REA-0316
Comp. No:	REA44

- ☐ Issued For Permit
- ☐ Issued For Review
- ☐ Issued For Bid
- ☐ Issued For Construction
- ☐ Not For Construction

No.	Revision	Date
10		
9		
8		
7		
6		
5		
4		
3	Town Comments	03/02/2012
2	Town Comments	12/19/2011
1		

Scale: 1"= 40' Hor. & 4' Ver.

0' 20' 40' 80'

Date: October 6, 2011

Drawing Title:

PLAN & PROFILE X-COUNTRY SEWER
JOHNSON WOODS
PUD (PHASE II)
READING, MASS.

COMMONWEALTH OF MASSACHUSETTS
William R. Bergeron
Civil
No. 34811
REGISTERED PROFESSIONAL ENGINEER

William R. Bergeron, P.E.
2/29/2012

Drawing No.:

C13

SHEET 13 OF 22

N:\REA44\JOHNSON_WOODS_II\SP\johnson_woods_phaseII_R4.dwg, 3/6/2012 11:34:51 AM, MEM

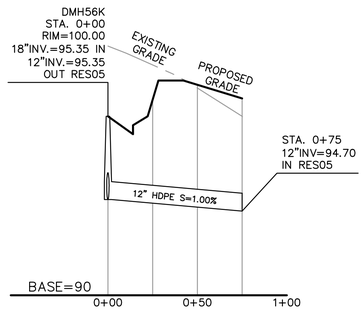

DISCHARGE TO RES05

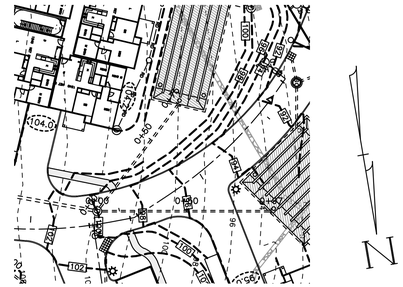

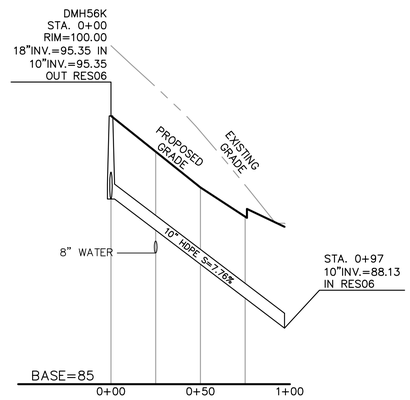

DISCHARGE TO RES06

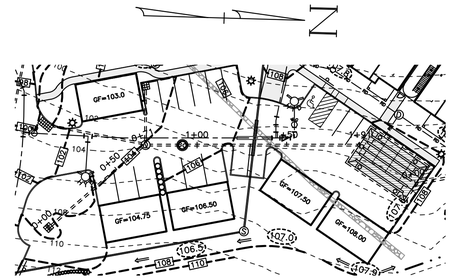

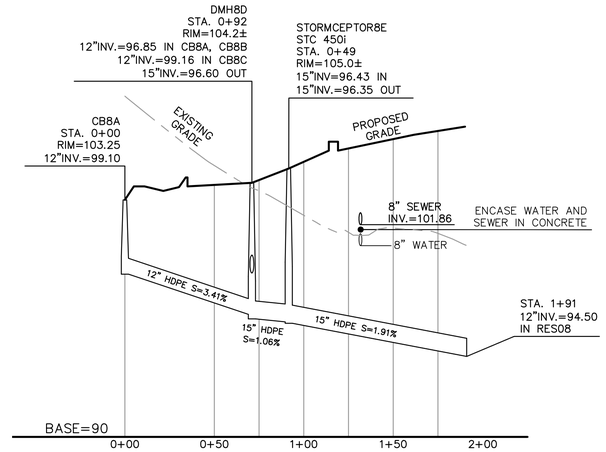

DISCHARGE TO RES08

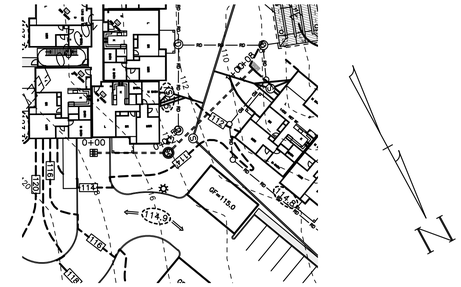

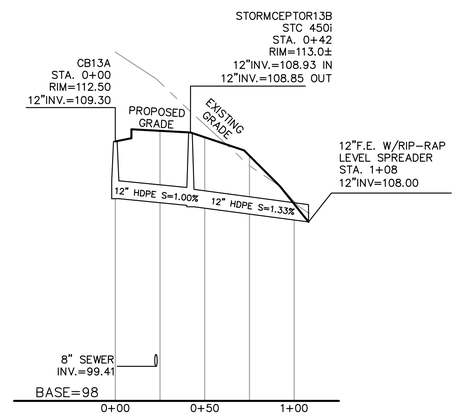

DRAIN BETWEEN BLDGS 67 & 68
(DISCHARGE TOWARDS CB13 @ INWOOD DR.)

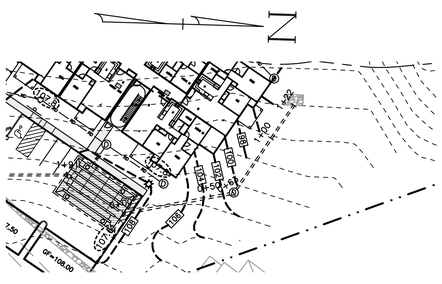

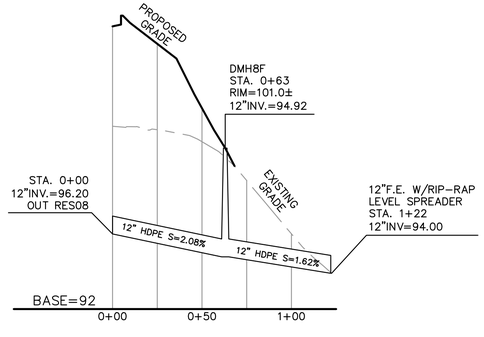

EMERGENCY DISCHARGE OUT RES08

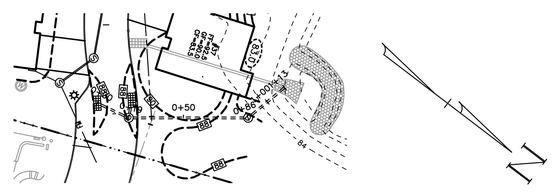

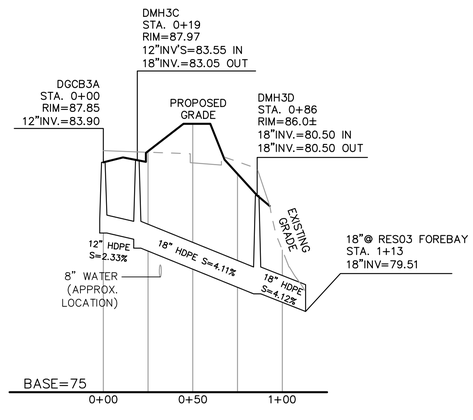

DISCHARGE TO RES03 FOREBAY
(GREEN MEADOW DRIVE)

Prepared For:

Owner / Applicant

Prepared By:

Hayes Engineering, Inc.
603 Salem Street
Wakefield, MA 01880
Ph: 781.246.2800
Fax: 781.246.7596
www.hayeseng.com

Design By:	xxx
Drawn By:	MEM
Checked By:	WRB
Project File:	REA-0316
Comp. No:	REA44

- ☐ Issued For Permit
- ☐ Issued For Review
- ☐ Issued For Bid
- ☐ Issued For Construction
- ☐ Not For Construction

No.	Revision	Date
10		
9		
8		
7	Town Comments	03/02/2012
6	Town Comments	12/19/2011
5		
4		
3		
2		
1		

Scale: 1"= 40' Hor. & 4' Ver.

0' 20' 40' 80'

Date: October 6, 2011

Drawing Title:

PLAN & PROFILE MISCELLANEOUS
JOHNSON WOODS
PUD (PHASE II)
READING, MASS.

COMMONWEALTH OF MASSACHUSETTS
William R. Bergeron
CIVIL
No. 34997
REGISTERED PROFESSIONAL ENGINEER

2/29/2012

Drawing No.:

C14

SHEET 14 OF 22

N:\REA44\JOHNSON_WOODS_11\5P\johnson_woods_phaseII_R4.dwg, 3/6/2012 11:34:57 AM, MEM

LUMINAIRE SCHEDULE

SYMBOL	LABEL	QUANTITY	CATALOG NUMBER HADCO LIGHTING	DESCRIPTION	LAMP	TILT	PHOTOMETRIC FILE	INITIAL LUMENS	LLF
✲	A	18	V681 A T3 ? D 70H E FINISH, ELECTRICAL & POLE TO BE DETERMINED BY OTHERS	TYPE III DISTRIBUTION 10' MOUNTING HEIGHT (SINGLE LAMP)	70 WATT METAL HALIDE	0°	V681–17H3H.ies	5,900 (DERATED)	0.8

– – – – – – – – – – DENOTES ISOFOOTCANDLE VALUE

GENERAL LIGHTING NOTES:

ILLUMINANCE VALUES SHOWN ARE PROPOSED MAINTAINED HORIZONTAL FOOTCANDLES ON LEVEL GRADE.

PHOTOMETRIC ANALYSIS DOES NOT CONSIDER ANY EXISTING ILLUMINANCE, AUXILIARY BUILDING LIGHTING, GRADE DIFFERENCES AND SHADOW OR REFLECTED LIGHT FROM EXISTING OR PROPOSED OBJECTS.

HORIZONTAL ILLUMINANCE LEVELS SHOWN ARE CALCULATED FROM DATA PROVIDED FROM MANUFACTURER IN ACCORDANCE WITH THE ILLUMINATING ENGINEERING SOCIETY APPROVED METHODS.

ACTUAL ILLUMINANCE LEVELS MAY DIFFER DUE TO SEVERAL FACTORS SUCH AS LAMP LUMEN DEPRECIATION, LUMINAIRE DIRT DEPRECIATION, LUMINAIRE SURFACE DEPRECIATION, EQUIPMENT OPERATING FACTOR AND OTHER VARIABLE FIELD CONDITIONS. LIGHTING LEVELS SHOWN ON THIS PLAN SHOULD BE CONSIDERED APPROXIMATE.

CONTRACTOR TO VERIFY ALL UTILITIES BEFORE CONSTRUCTION.

HADCO LIGHTING
BALTIMORE V681 POST TOP

Prepared For:

Owner / Applicant

Johnson Woods Realty Corp.
c/o Glover Property
Management, Inc.
8 Dooks Lane
Marblehead, MA 01945

Prepared By:

Hayes Engineering, Inc.
95 Sanderson Street
Wakefield, MA 01880
Ph: 781.246.2800
Fax: 781.246.7596
www.hayesengs.com

Design By: xxx
Drawn By: MEM
Checked By: WRB
Project File: REA–0316
Comp. No: REA44

- [x] Issued For Permit
- [ ] Issued For Review
- [ ] Issued For Bid
- [ ] Issued For Construction
- [ ] Not For Construction

No.	Revision	Date
10		
9		
8		
7		
6		
5		
4		
3	Reprinted, No Changes	03/02/2012
2	Town Comments	12/19/2011
1		

Scale: 1"= 40'
0' 20' 40' 80'

Date: October 6, 2011

PHOTOMETRIC PLAN
JOHNSON WOODS
PLANNED UNIT DEVELOPMENT
(PHASE II)
READING, MASS.

COMMONWEALTH OF MASSACHUSETTS
William R. Bergeron
No. 34767
PROFESSIONAL ENGINEER
2/29/2012

Drawing No.:

C15

SHEET 15 OF 22

N:\REA44\JOHNSON_WOODS_II\SP\johnson_woods_phaseII_R4.dwg, 3/6/2012 11:35:01 AM, MEM

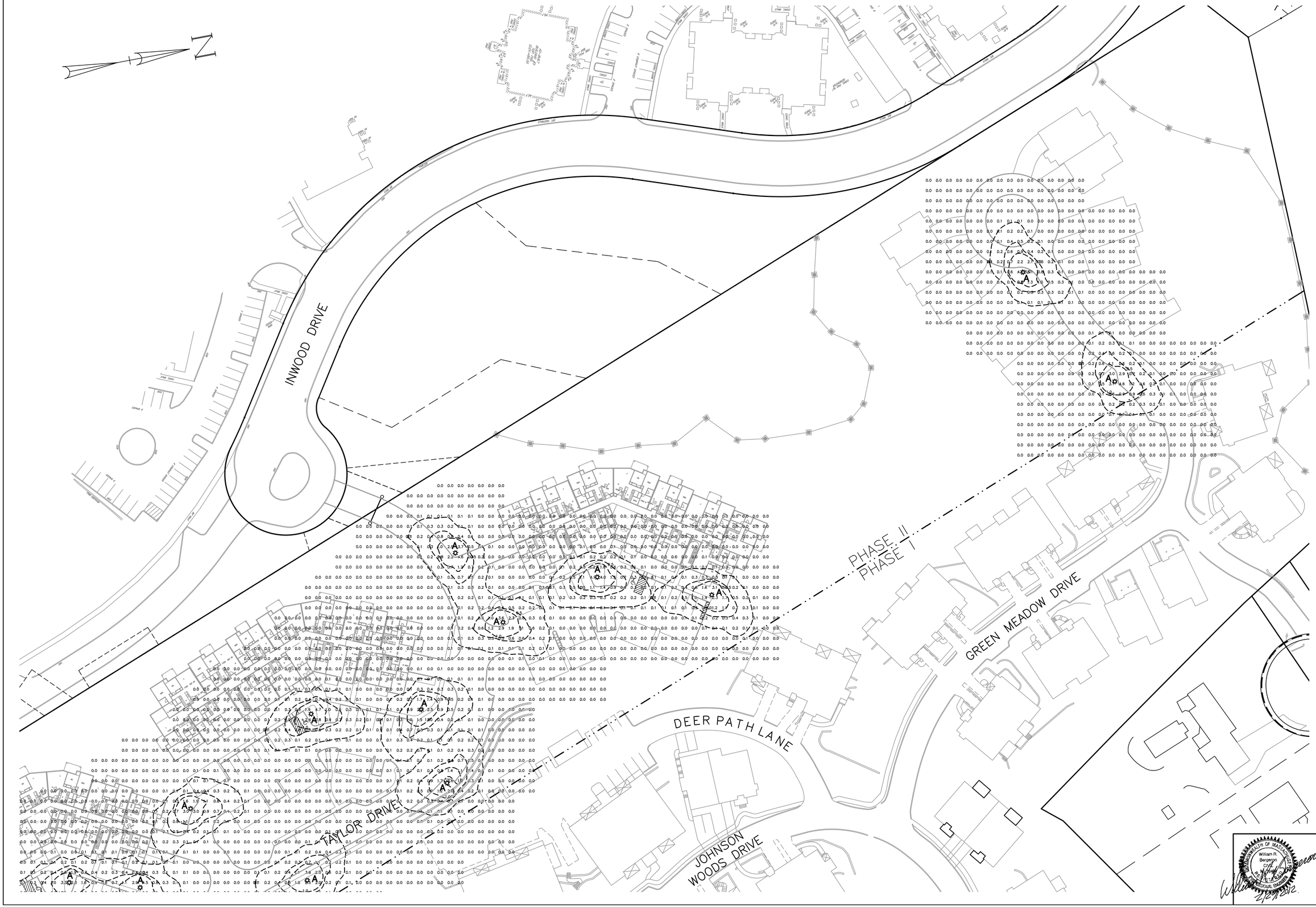

Prepared For:

Owner / Applicant

Johnson Woods Realty Corp.
c/o Glover Property Management, Inc.
8 Doaks Lane
Marblehead, MA 01945

Prepared By:

Hayes Engineering, Inc.
603 Salem Street
Wakefield, MA 01880
Ph: 781.246.2800
Fax: 781.246.7596
www.hayeseng.com

Design By: xxx
Drawn By: MEM
Checked By: WRB
Project File: REA-0316
Comp. No: REA44

- [x] Issued For Permit
- [ ] Issued For Review
- [ ] Issued For Bid
- [ ] Issued For Construction
- [ ] Not For Construction

No.	Revision	Date
10		
9		
8		
7		
6		
5		
4		
3	Reprinted, No Changes	03/02/2012
2	Town Comments	12/19/2011
1		

Scale: 1"= 40'
0' 20' 40' 80'

Date: October 6, 2011

PHOTOMETRIC PLAN
JOHNSON WOODS
PLANNED UNIT DEVELOPMENT
(PHASE II)
READING, MASS.

Drawing No.:

C16

SHEET 16 OF 22

N:\REA44\JOHNSON_WOODS_II\SPjohnson_woods_phaseII_R4.dwg, 3/6/2012 11:35:06 AM, MEM

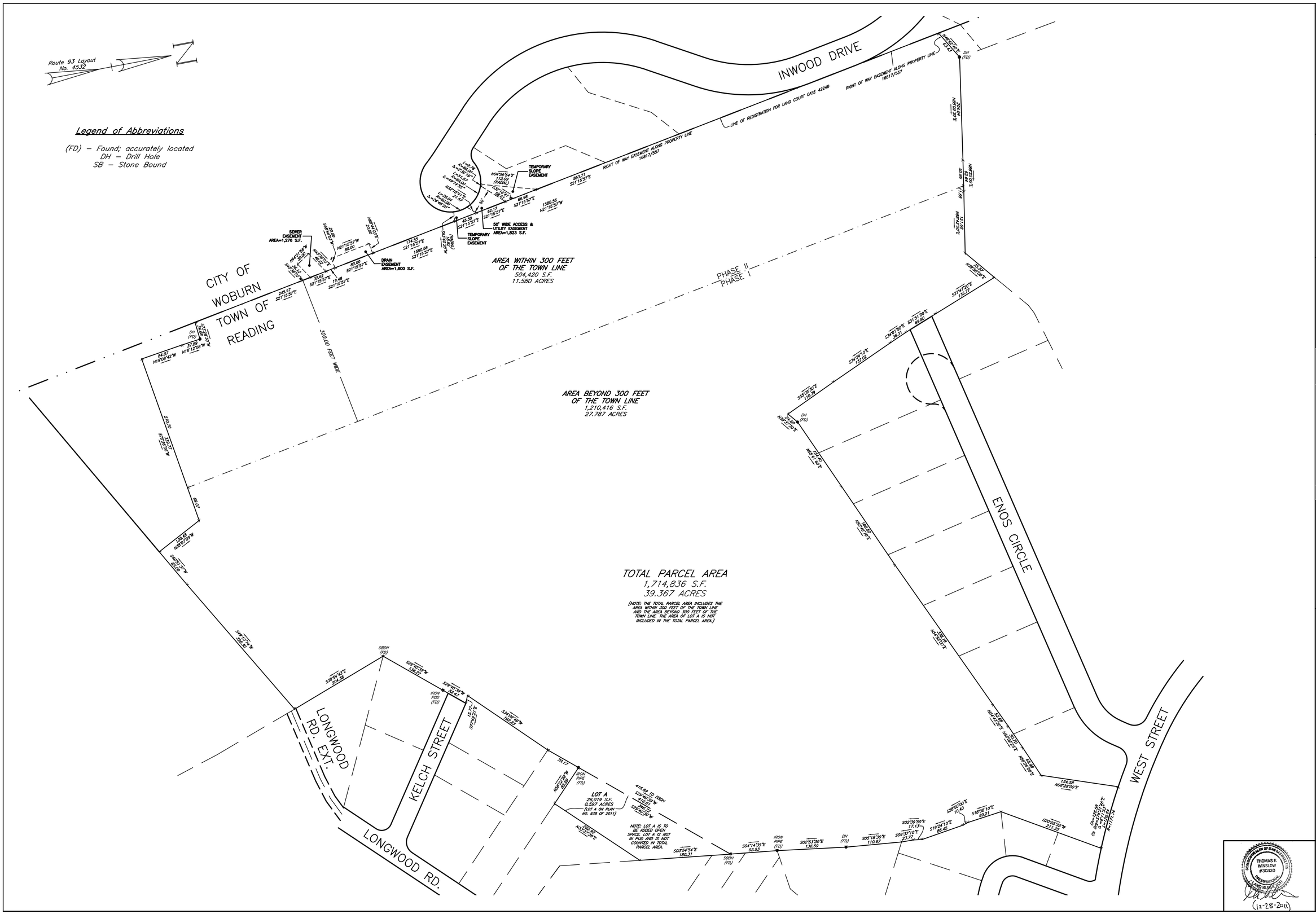

Prepared For:

Owner / Applicant

Johnson Woods Realty Corp.
c/o Glover Property
Management, Inc.
8 Daaks Lane
Marblehead, MA 01945

Prepared By:

Hayes Engineering, Inc.
95 Salem Street
Wakefield, MA 01880
Ph: 781.246.2800
Fax: 781.246.7596
www.hayeseng.com

Design By:	xxx
Drawn By:	MEM
Checked By:	WRB
Project File:	REA–0316
Comp. No:	REA44

- [x] Issued For Permit
- [ ] Issued For Review
- [ ] Issued For Bid
- [ ] Issued For Construction
- [ ] Not For Construction

No.	Revision	Date
10		
9		
8		
7		
6		
5		
4		
3	Reprinted, No Changes	03/02/2012
2	Town Comments	12/19/2011
1		

Scale: 1"= 80'
0' 40' 80' 160'

Date: October 6, 2011

SURVEY PLAN
JOHNSON WOODS
PLANNED UNIT DEVELOPMENT
(PHASE II)
READING, MASS.

COMMONWEALTH OF MASSACHUSETTS
THOMAS F. WINSLOW
#30320
REGISTERED PROFESSIONAL ENGINEER

(12-28-2011)

Drawing No.:

C17

SHEET 17 OF 21

N:\REA44\JOHNSON_WOODS_II\SP\johnson_woods_phaseII_B4.dwg, 3/6/2012 11:35:11 AM, MEM

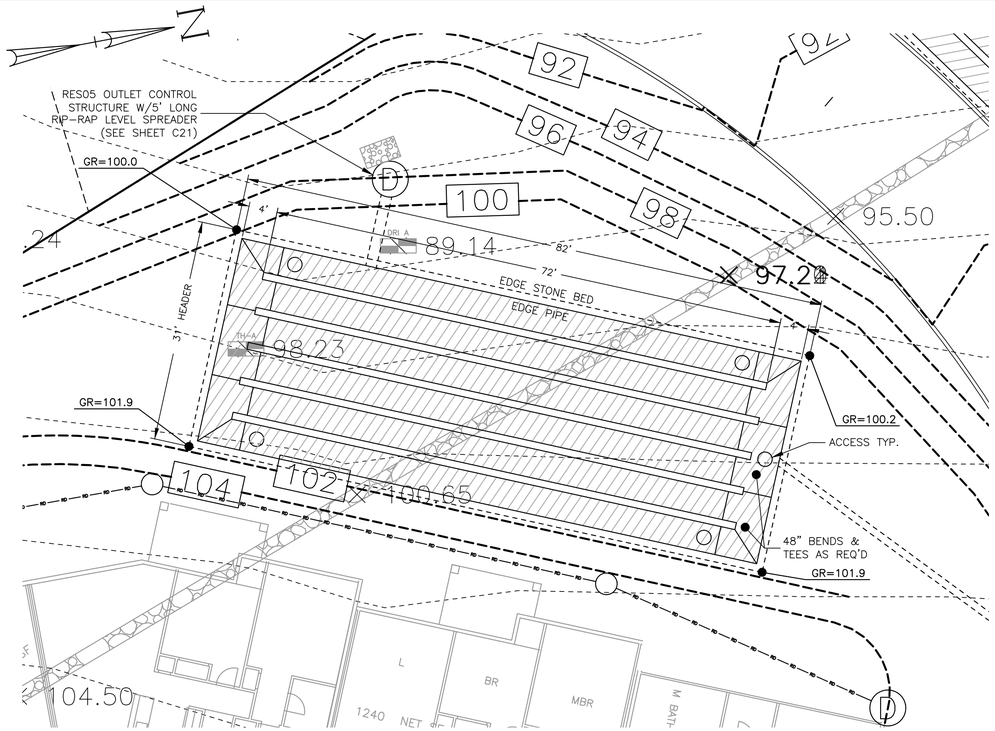

PLAN VIEW
SCALE:1"=10'

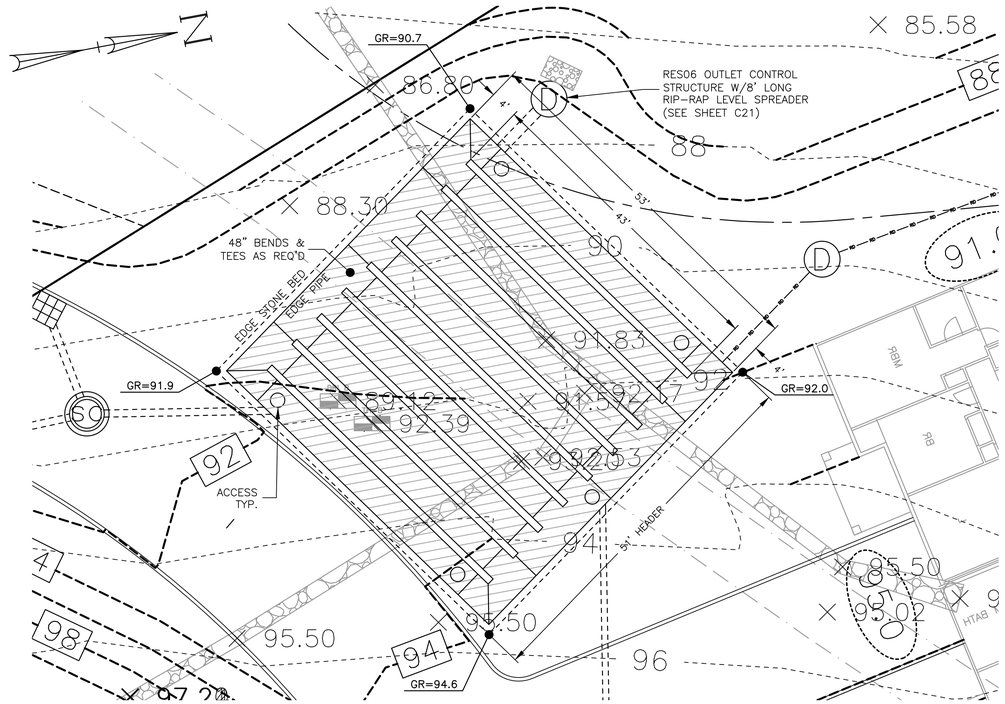

PLAN VIEW
SCALE:1"=10'

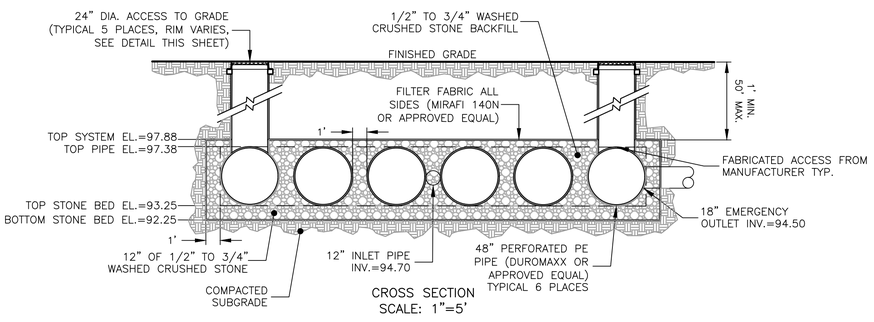

CROSS SECTION
SCALE: 1"=5'

RES05 SUBSURFACE INFILTRATION BMP
SCALE AS SHOWN

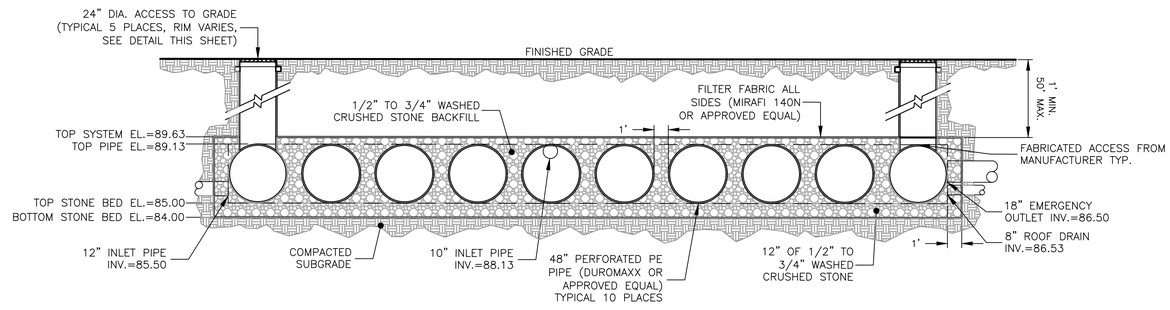

CROSS SECTION
SCALE: 1"=5'

RES06 SUBSURFACE INFILTRATION BMP
SCALE AS SHOWN

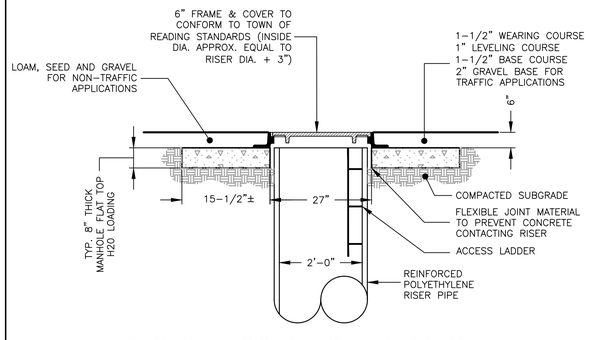

TYPICAL RISER AND ACCESS DETAIL
SCALE AS SHOWN

Prepared For:

Owner / Applicant

Johnson Woods Realty Corp.
c/o Glover Property Management, Inc.
8 Dooks Lane
Marblehead, MA 01945

Prepared By:

Hayes Engineering, Inc.
495 Sylvan Street
Wakefield, MA 01880
Ph: 781.246.2800
Fax: 781.246.7596
www.hayeseng.com

Design By:	xxx
Drawn By:	MEM
Checked By:	WRB
Project File:	REA-0316
Comp. No:	REA44

- [x] Issued For Permit
- [ ] Issued For Review
- [ ] Issued For Bid
- [ ] Issued For Construction
- [ ] Not For Construction

No.	Revision	Date
10		
9		
8		
7		
6		
5		
4		
3	Reprinted, No Changes	03/02/2012
2	Town Comments	12/19/2011
1		

Scale: As Shown

Date: October 6, 2011

SITE DETAILS PLAN
JOHNSON WOODS
PLANNED UNIT DEVELOPMENT (PHASE II)
READING, MASS.

COMMONWEALTH OF MASSACHUSETTS
William R. Bergeron
No. 37164
REGISTERED PROFESSIONAL ENGINEER
2/29/2012

Drawing No.:

C18

SHEET 18 OF 22

N:\REA44\JOHNSON_WOODS_II\Sjohnson_woods_phaseII_R4.dwg, 3/6/2012 11:35:17 AM, MEM

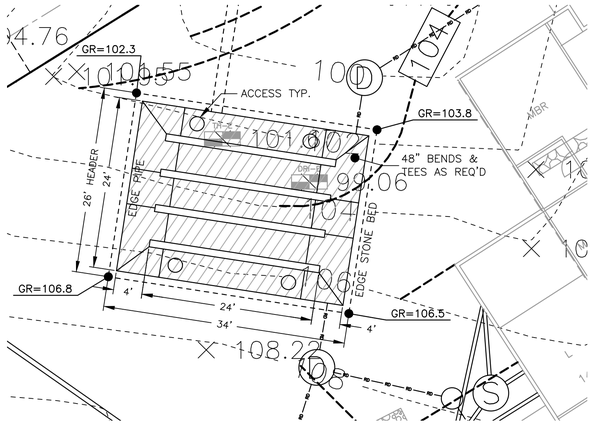

PLAN VIEW
SCALE:1"=10'

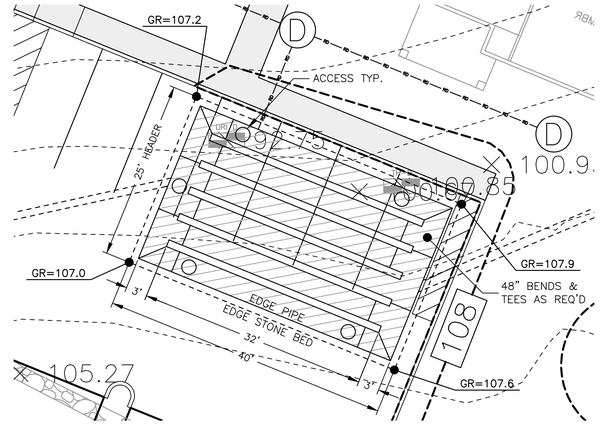

PLAN VIEW
SCALE:1"=10'

Rinker MATERIALS™ — Concrete Pipe Division

STC 900 Precast Concrete Stormceptor®
(900 U.S. Gallon Capacity)

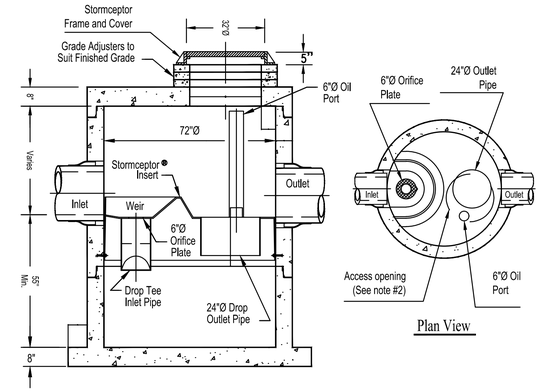

Section Thru Chamber

Notes:
1. The Use Of Flexible Connection is Recommended at The Inlet and Outlet Where Applicable.
2. The Cover Should be Positioned Over The Outlet Drop Pipe and The Oil Port.
3. The Stormceptor System is protected by one or more of the following U.S. Patents: #4985148, #5498331, #5725760, #5753115, #5849181, #6068765, #6371690.
4. Contact a Concrete Pipe Division representative for further details not listed on this drawing.

Rinker 028

STORMCEPTOR STC 900
NOT TO SCALE

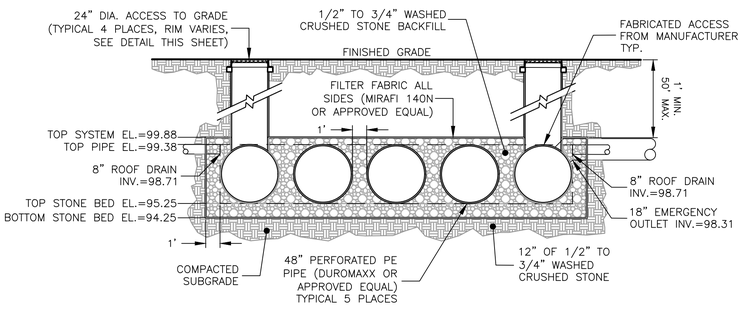

CROSS SECTION
SCALE: 1"=5'

RES07 SUBSURFACE INFILTRATION BMP
NOT TO SCALE

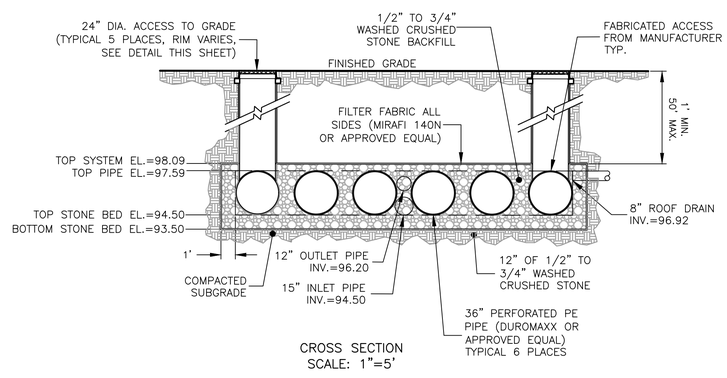

CROSS SECTION
SCALE: 1"=5'

RES08 SUBSURFACE INFILTRATION BMP
SCALE AS SHOWN

Rinker MATERIALS™ — Concrete Pipe Division

STC 450i Precast Concrete Stormceptor®
(450 U.S. Gallon Capacity)

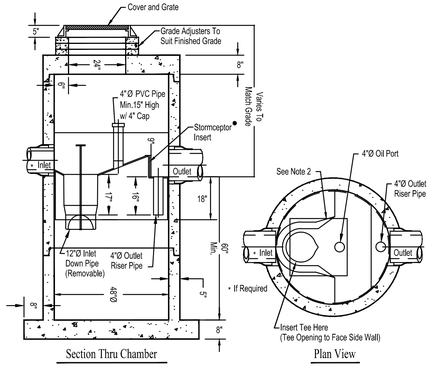

Section Thru Chamber — Plan View

Notes:
1. The Use Of Flexible Connection is Recommended at The Inlet and Outlet Where Applicable.
2. The Cover Should be Positioned Over The Inlet Drop Pipe and The Oil Port.
3. The Stormceptor System is protected by one or more of the following U.S. Patents: #4985148, #5498331, #5725760, #5753115, #5849181, #6068765, #6371690.
4. Contact a Concrete Pipe Division representative for further details not listed on this drawing.

Rinker 027

STORMCEPTOR STC 450i
NOT TO SCALE

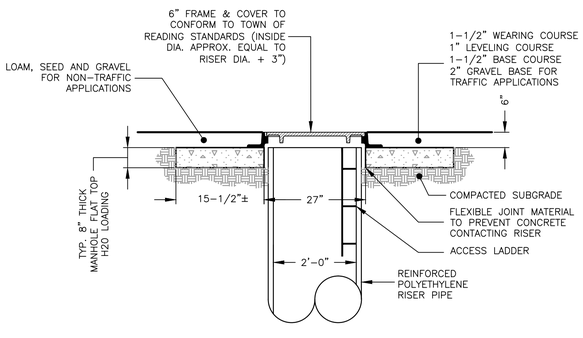

TYPICAL RISER AND ACCESS DETAIL
SCALE AS SHOWN

Prepared For:
Owner / Applicant
Johnson Woods Realty Corp.
c/o Glover Property Management, Inc.
8 Dooks Lane
Marblehead, MA 01945

Prepared By:
Hayes Engineering, Inc.
95 Santilli Highway
Wakefield, MA 01880
Ph: 781.246.2800
Fax: 781.246.7596
www.hayeseng.com

Design By:	xxx
Drawn By:	MEM
Checked By:	WRB
Project File:	REA-0316
Comp. No:	REA44

- [x] Issued For Permit
- [ ] Issued For Review
- [ ] Issued For Bid
- [ ] Issued For Construction
- [ ] Not For Construction

No.	Revision	Date
10		
9		
8		
7		
6		
5		
4		
3	Town Comments	03/02/2012
2	Town Comments	12/19/2011
1		

Scale: As Shown

Date: October 6, 2011

SITE DETAILS PLAN
JOHNSON WOODS
PLANNED UNIT DEVELOPMENT
(PHASE II)
READING, MASS.

COMMONWEALTH OF MASSACHUSETTS — William R. Bergeron, Civil — No. 34777 — REGISTERED PROFESSIONAL ENGINEER
2/29/2012

Drawing No.:
C19

SHEET 19 OF 22

N:\REA44\JOHNSON_WOODS_II\SP\johnson_woods_phaseII_R4.dwg, 3/6/2012 11:35:23 AM, MEM

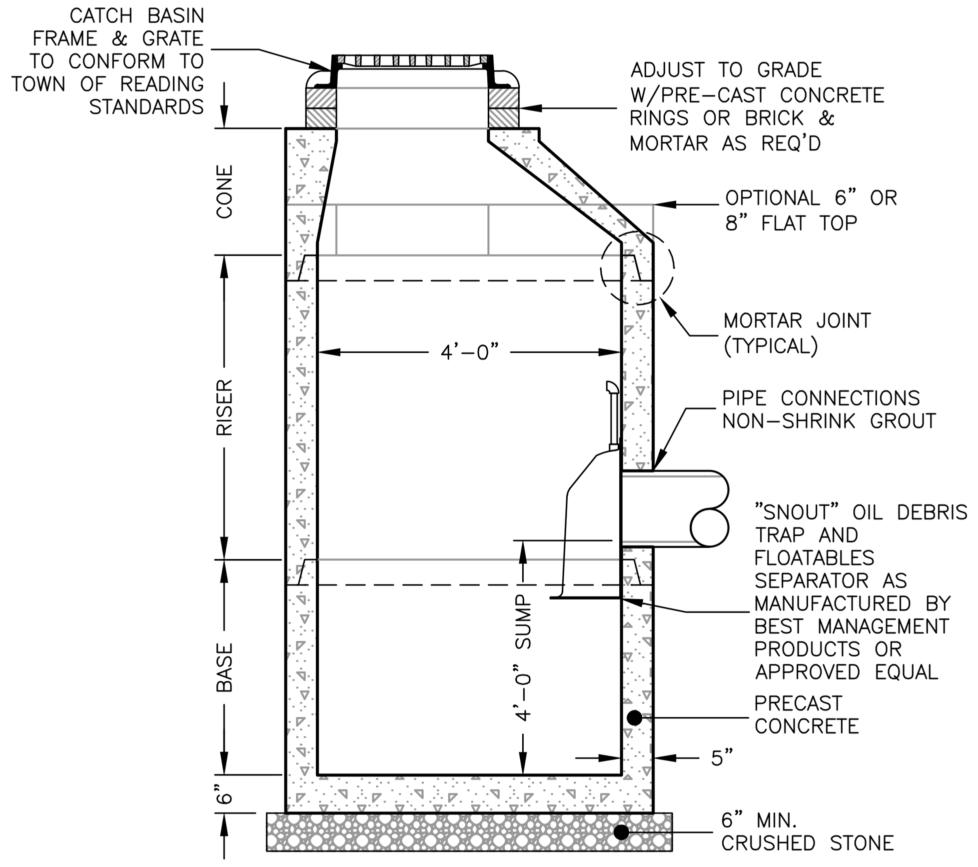

PRE-CAST CATCH BASIN
NOT TO SCALE

NOTES:
1. CONCRETE: 4,000 PSI MINIMUM AFTER 28 DAYS.
2. REINFORCED STEEL CONFORMS TO LATEST ASTM A185 SPEC. 0.12 SQ. IN./LINEAL FT. AND 0.12 SQ. IN. (BOTH WAYS) BASE BOTTOM.
3. H-20 DESIGN LOADING PER AASHTO HS-20-44; ASTM C478 SPEC FOR "PRECAST REINFORCED CONCRETE MANHOLE SECTIONS."

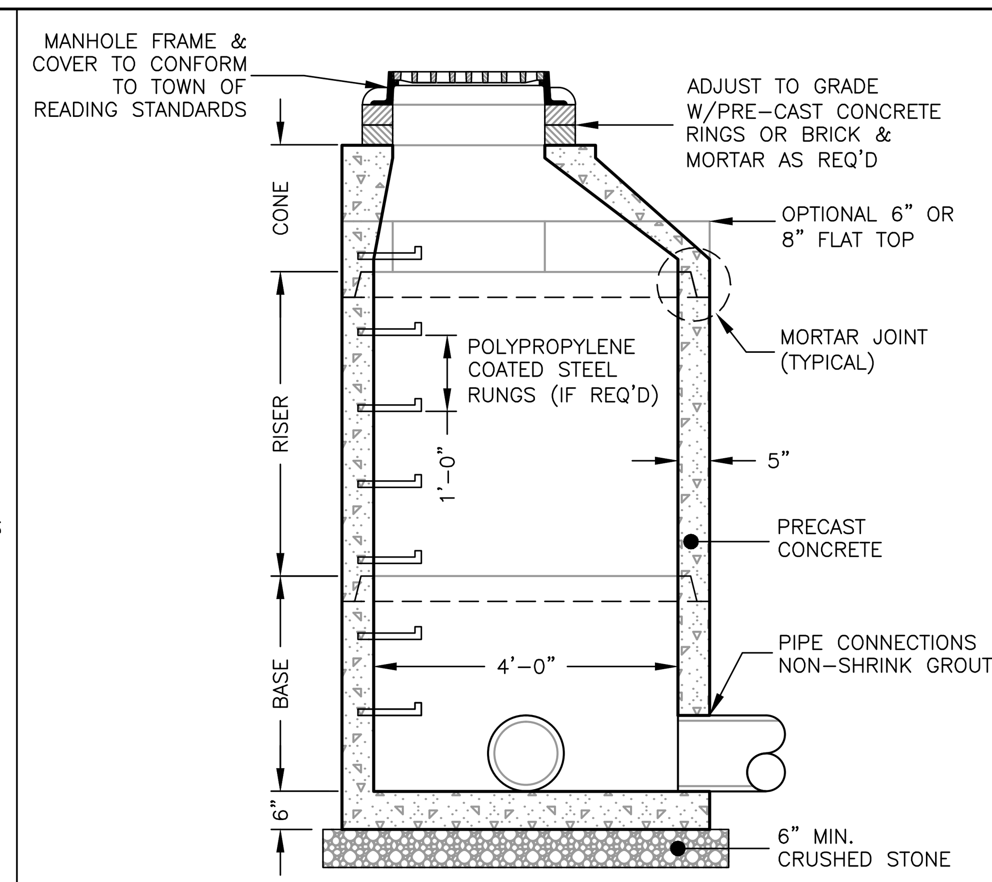

PRE-CAST DRAIN MANHOLE
NOT TO SCALE

NOTES:
1. CONCRETE: 4,000 PSI MINIMUM AFTER 28 DAYS.
2. REINFORCED STEEL CONFORMS TO LATEST ASTM A185 SPEC. 0.12 SQ. IN./LINEAL FT. AND 0.12 SQ. IN. (BOTH WAYS) BASE BOTTOM.
3. H-20 DESIGN LOADING PER AASHTO HS-20-44; ASTM C478 SPEC FOR "PRECAST REINFORCED CONCRETE MANHOLE SECTIONS."

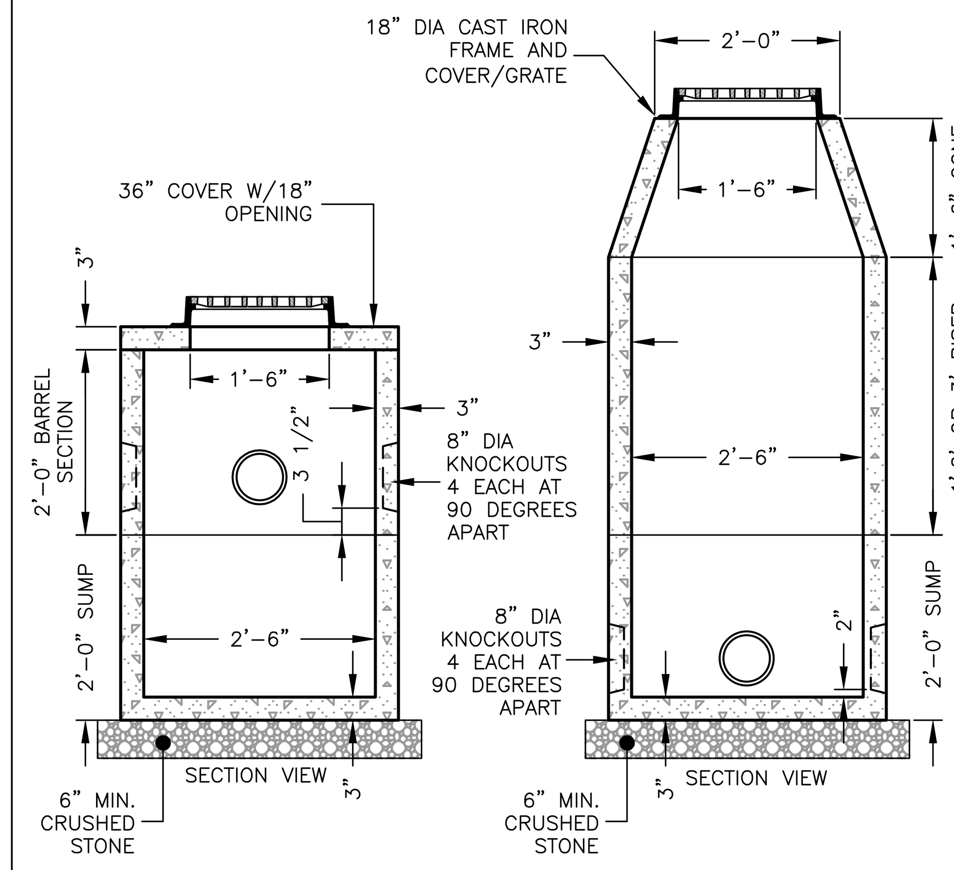

YARD DRAIN/ROOF DRAIN
NOT TO SCALE

NOTES:
1. CONCRETE: 4,000 PSI MINIMUM AFTER 28 DAYS.
2. FLAT COVER WITH CLEANOUT CAN BE USED IN PLACE OF CONE.
3. OPTIONAL ROUND CONCRETE COVER CAN BE USED IN PLACE OF CAST IRON FRAME AND COVER.

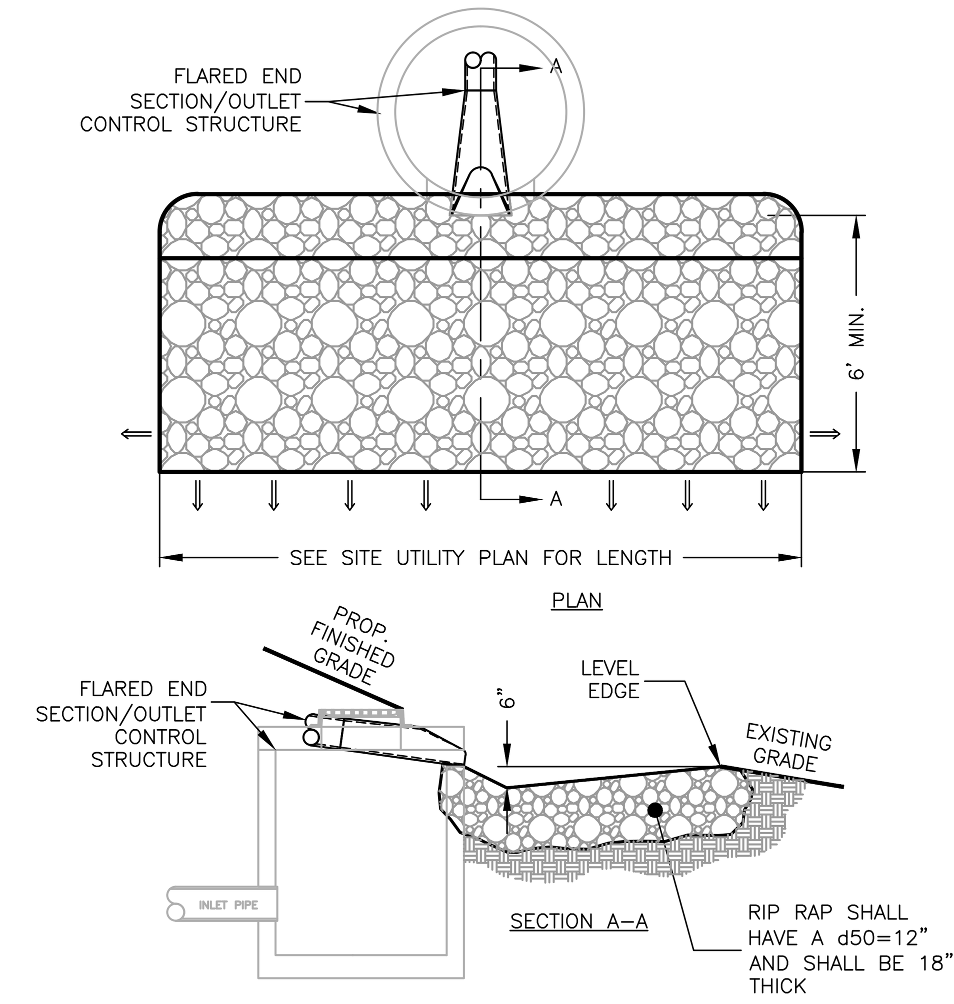

LEVEL SPREADER
NOT TO SCALE

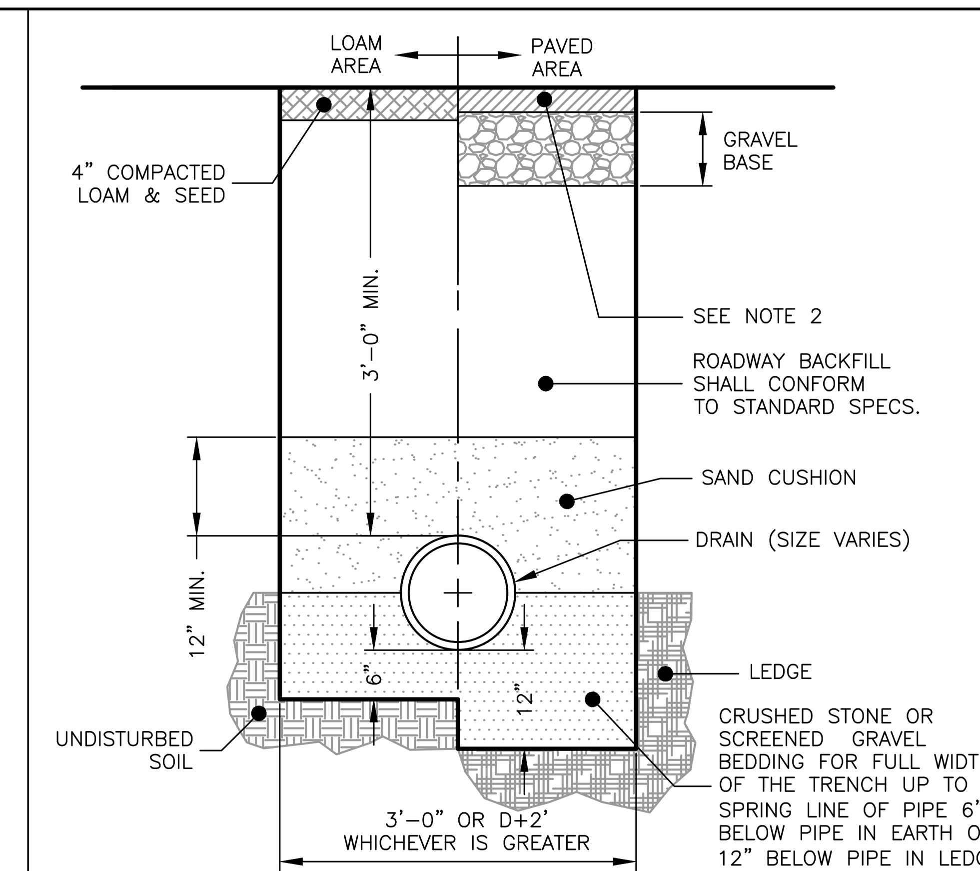

DRAIN TRENCH
NOT TO SCALE

NOTES:
1. ALL MATERIAL SHALL CONFORM TO CITY/TOWN OF DEPARTMENT OF PUBLIC WORKS.
2. NEW ROADWAY CONSTRUCTION SHALL CONFORM TO CITY/TOWN SPECIFICATIONS.
3. IN LIEU OF THE 12" GRAVEL COURSE AND 9" OF CRUSHED GRAVEL, 18" OF CRUSHED GRAVEL OR RECLAIMED STABILIZED BASE MAY BE USED AS A BASE FOR THE PAVEMENT REPAIR.
4. MATERIAL SHALL BE REPLACED IN KIND WHENEVER POSSIBLE.
5. A MINIMUM 2' CUTBACK IS REQUIRED AT THE TOP OF THE TRENCH WALL OVER UNDISTURBED MATERIAL.

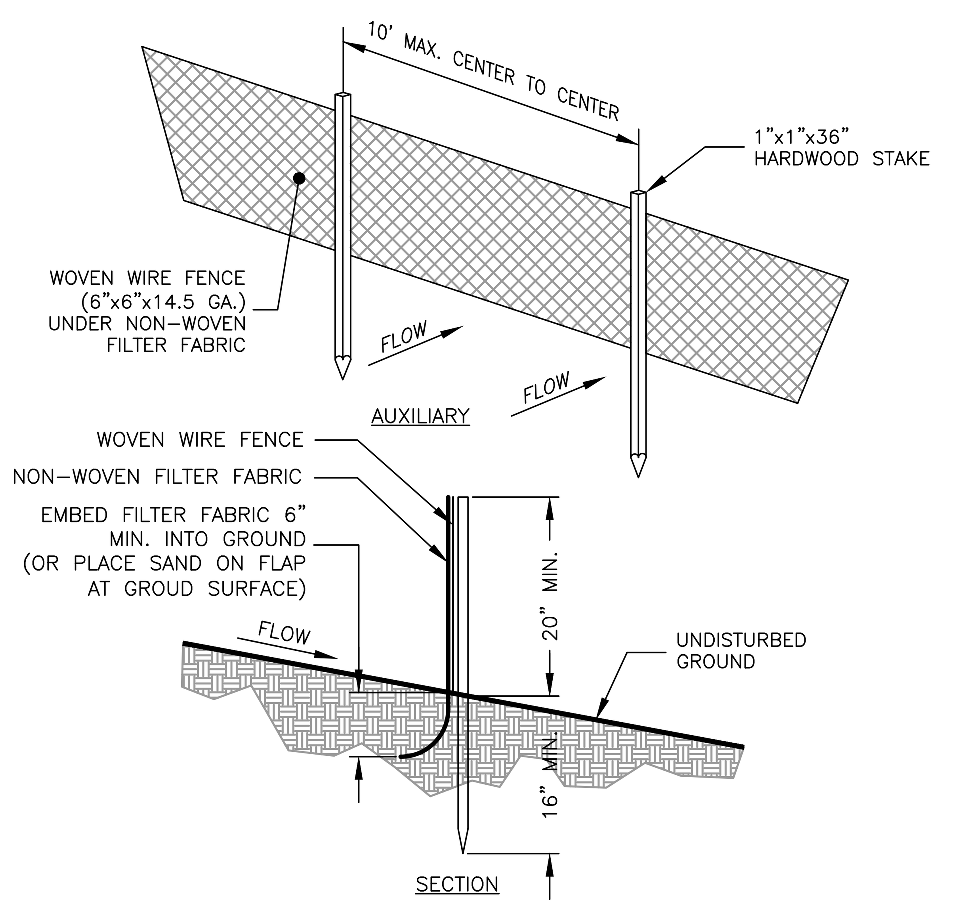

SILT FENCE
NOT TO SCALE

NOTES:
1. WOVEN WIRE FENCE (6"X6"X14.5 GA.) UNDER NON-WOVEN FILTER FABRIC TO BE USED AT ALL WETLAND CROSSINGS AND ALL AREAS WITHIN 25' OF THE WETLAND LINE. ALL OTHER LOCATIONS THE FILTER FABRIC TO BE UV RESISTANT POLYPROPYLENE WITH A MINIMUM WEIGHT OF 2.5 OZ./SY.
2. USE MULTIPLE ROWS OF SILT FENCE FOR LONG STEEP SLOPES IF NECESSARY.

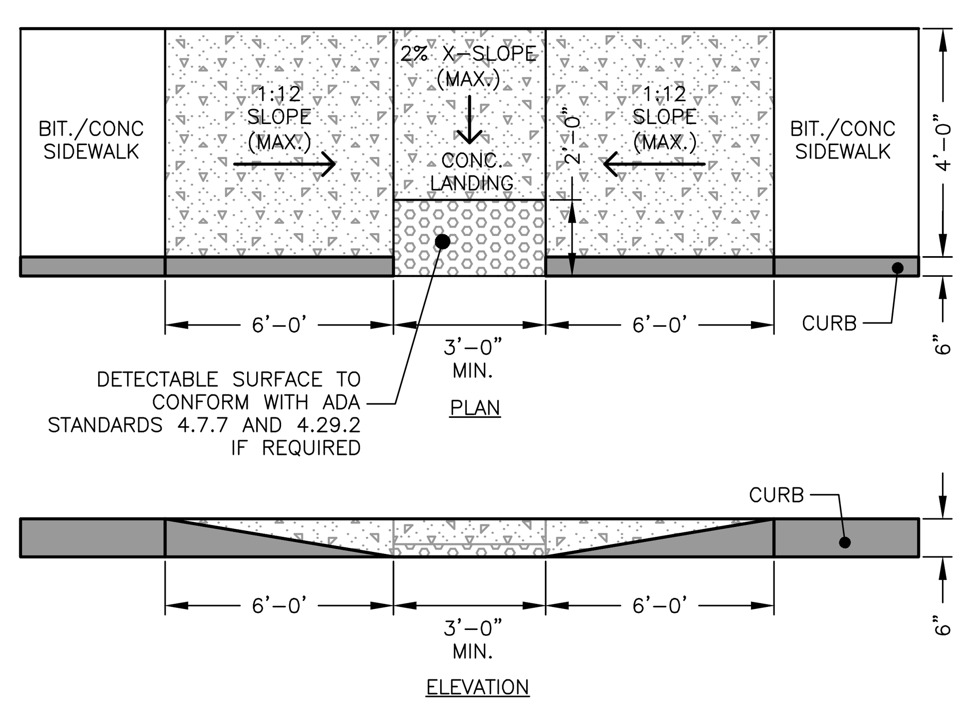

4.29.2 DETECTABLE WARNINGS ON WALKING SURFACES. "DETECTABLE WARNINGS SHALL CONSIST OF RAISED TRUNCATED DOMES WITH A DIAMETER OF NOMINAL 0.9", A HEIGHT OF NOMINAL 0.2" AND A CENTER-TO-CENTER SPACING OF NOMINAL 2.35" AND SHALL CONTRAST VISUALLY WITH ADJOINING SURFACES, EITHER LIGHT ON DARK, OR DARK ON LIGHT."

WHEELCHAIR RAMP
NOT TO SCALE

NOTE:
WHEELCHAIR RAMP SHALL COMPLY WITH ALL STATE AND FEDERAL RULES AND REGULATIONS.

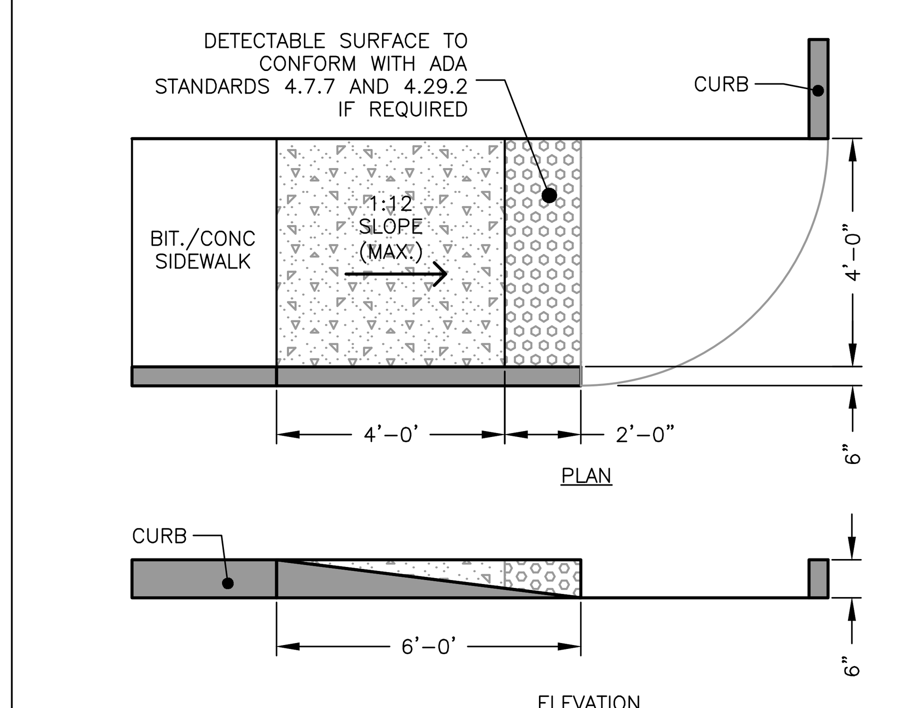

4.29.2 DETECTABLE WARNINGS ON WALKING SURFACES. "DETECTABLE WARNINGS SHALL CONSIST OF RAISED TRUNCATED DOMES WITH A DIAMETER OF NOMINAL 0.9", A HEIGHT OF NOMINAL 0.2" AND A CENTER-TO-CENTER SPACING OF NOMINAL 2.35" AND SHALL CONTRAST VISUALLY WITH ADJOINING SURFACES, EITHER LIGHT ON DARK, OR DARK ON LIGHT."

WHEELCHAIR RAMP
NOT TO SCALE

NOTE:
WHEELCHAIR RAMP SHALL COMPLY WITH ALL STATE AND FEDERAL RULES AND REGULATIONS.

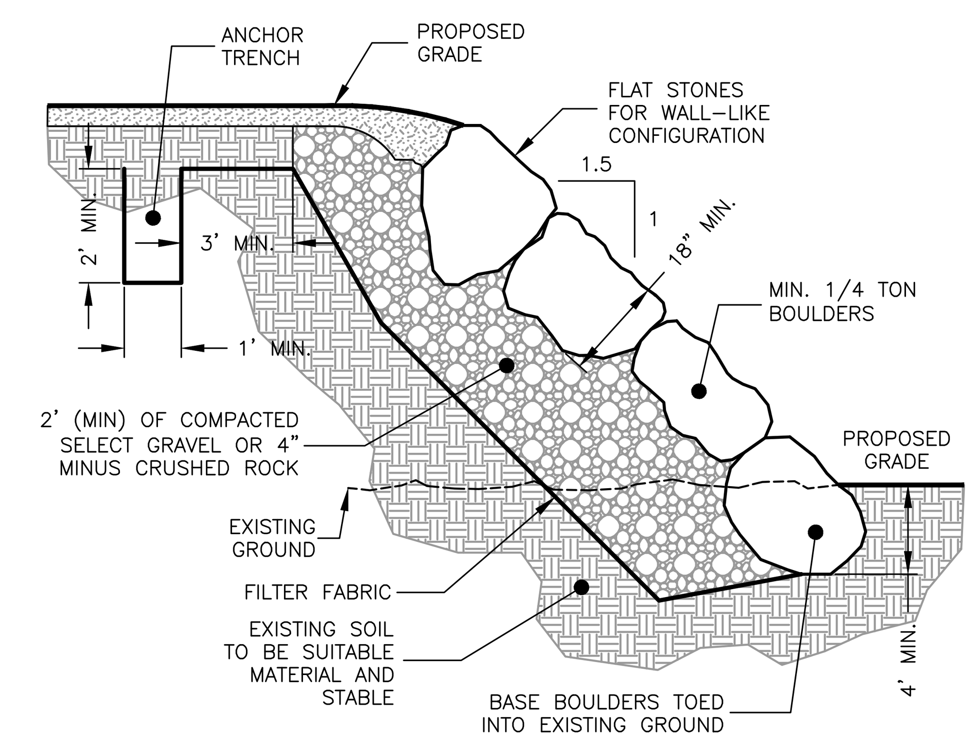

1.5:1 RIPRAP SLOPE
NOT TO SCALE

NOTES:
1. AREAS TO BE PROTECTED BY REVETMENT SHALL BE FREE OF BRUSH, TREES, STUMPS & OTHER ORGANIC MATERIAL & BE DRESSED TO A SMOOTH SURFACE. ALL SOFT OR SPONGY MATERIAL SHALL BE REMOVED TO THE DEPTH SHOWN ON THE PLANS OR AS DIRECTED BY THE ENGINEER & REPLACED WITH APPROVED MATERIALS.
2. THE STONES SHALL BE PLACED UPON AN APPROVED BED TO LINES & GRADES SHOWN ON PLAN. EACH STONE SHALL BE CAREFULLY PLACED BY HAND OR MACHINE, ON A PREPARED BED NORMAL TO THE SLOPE AND FIRMLY BEDDED THEREON THE LARGE STONES SHALL BE PLACED CLOSELY TOGETHER & THE INTERVENING SPACES FILLED WITH SMALLER STONES IN SUCH A MANNER THAT THE ENTIRE SURFACE WILL FORM A COMPACT MASS.

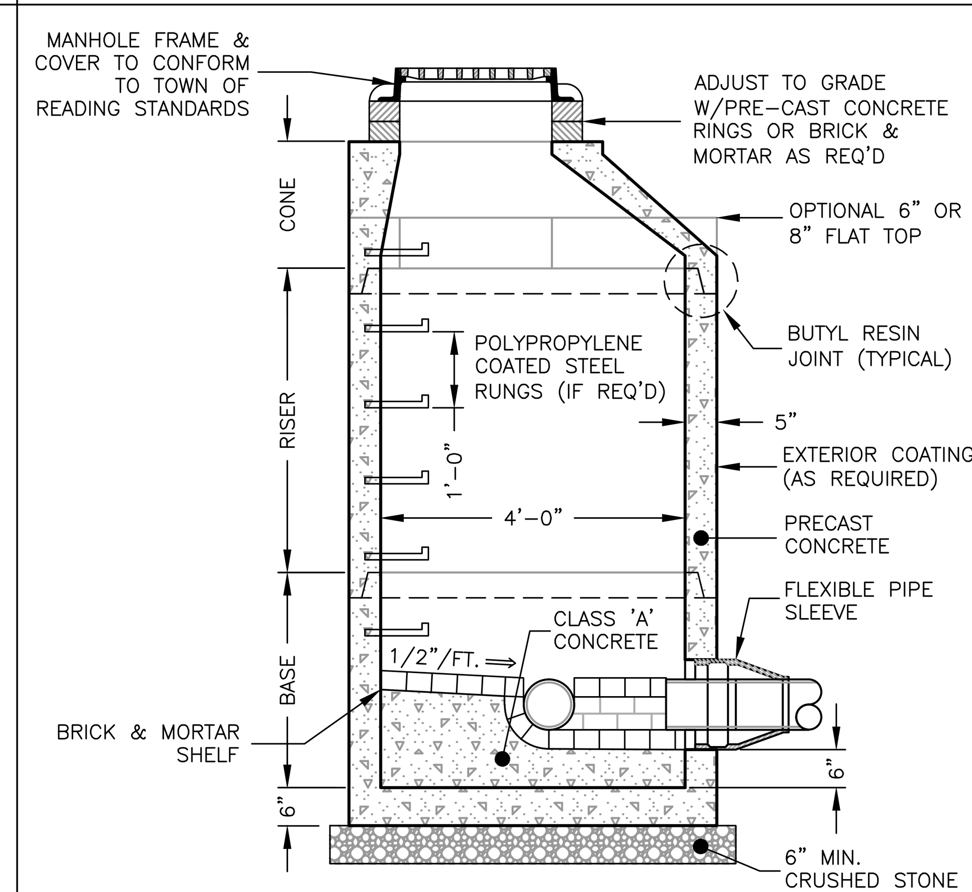

PRE-CAST SEWER MANHOLE
NOT TO SCALE

NOTES:
1. CONCRETE: 4,000 PSI MINIMUM AFTER 28 DAYS.
2. REINFORCED STEEL CONFORMS TO LATEST ASTM A185 SPEC. 0.12 SQ. IN./LINEAL FT. AND 0.12 SQ. IN. (BOTH WAYS) BASE BOTTOM.
3. H-20 DESIGN LOADING PER AASHTO HS-20-44; ASTM C478 SPEC FOR "PRECAST REINFORCED CONCRETE MANHOLE SECTIONS."

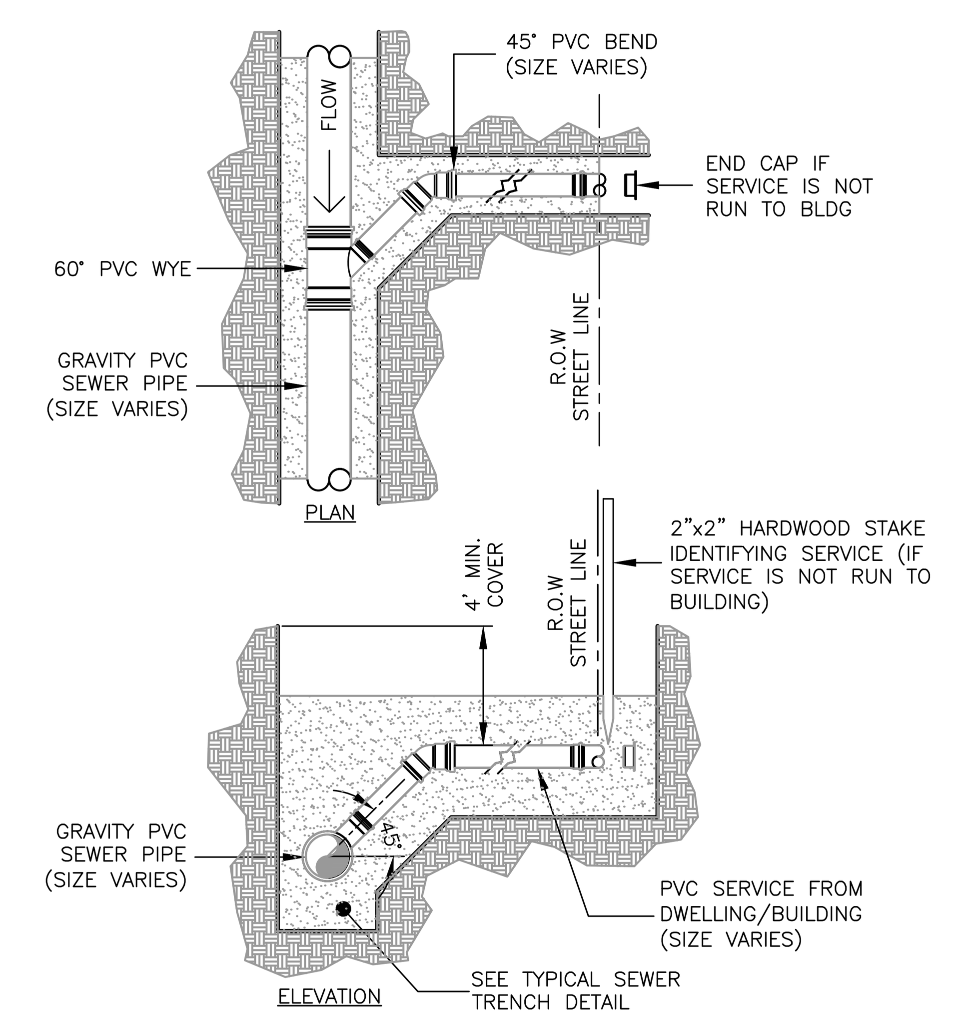

SEWER SERVICE CONNECTION
NOT TO SCALE

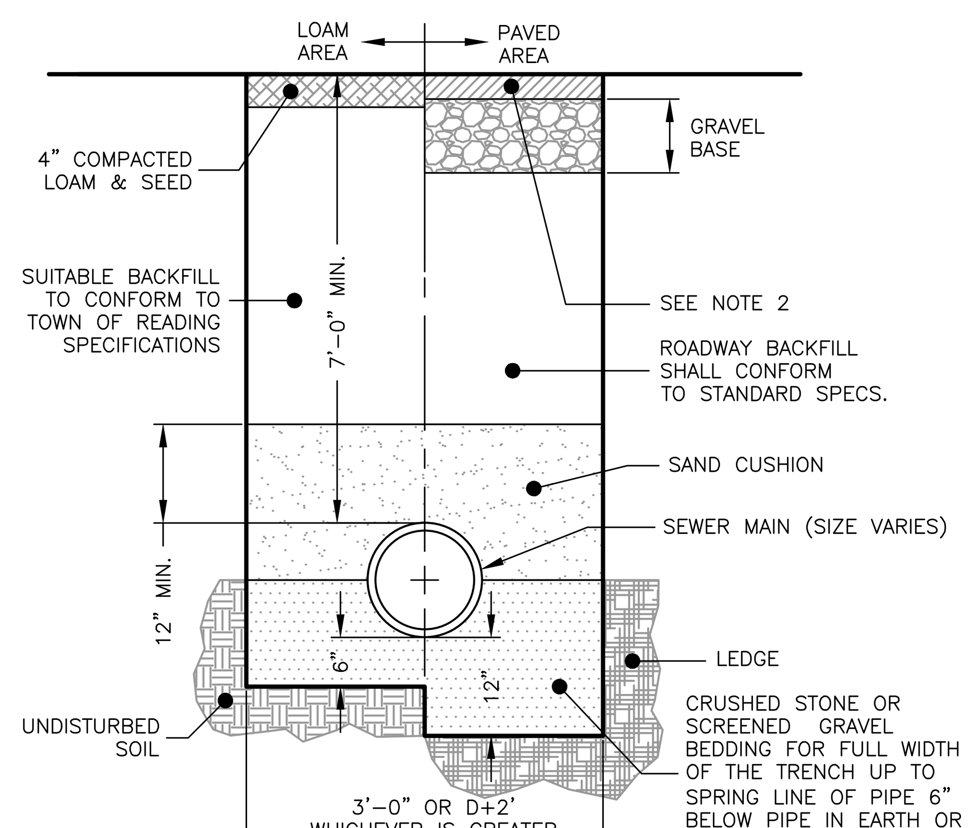

SEWER TRENCH
NOT TO SCALE

NOTES:
1. ALL MATERIAL SHALL CONFORM TO CITY/TOWN OF DEPARTMENT OF PUBLIC WORKS.
2. NEW ROADWAY CONSTRUCTION SHALL CONFORM TO CITY/TOWN SPECIFICATIONS.
3. IN LIEU OF THE 12" GRAVEL COURSE AND 9" OF CRUSHED GRAVEL, 18" OF CRUSHED GRAVEL OR RECLAIMED STABILIZED BASE MAY BE USED AS A BASE FOR THE PAVEMENT REPAIR.
4. MATERIAL SHALL BE REPLACED IN KIND WHENEVER POSSIBLE.
5. A MINIMUM 2' CUTBACK IS REQUIRED AT THE TOP OF THE TRENCH WALL OVER UNDISTURBED MATERIAL.

INLET	A	B	D	INLET	A	B	D	INLET	A	B	D
4"	3'-0"	2'-6"	3'-6"	6"	5'-0"	4'-6"	4'-0"	8"	6'-0"	5'-0"	5'-0"
5"	5'-0"	4'-0"	3'-6"		4'-0"	3'-6"	4'-0"x4'-0"		4'-6"	4'-0"	5'-6"x5'-6"
	4'-0"	3'-0"	3'-6"x3'-6"		4'-0"	3'-6"	4'-6"		4'-0"	3'-6"	6'-0"
	3'-6"	3'-0"	4'-0"		3'-6"	3'-0"	4'-6"x4'-6"		3'-0"	2'-6"	6'-0"x6'-0"
	3'-0"	2'-6"	4'-0"x4'-0"		3'-6"	3'-0"	5'-0"		3'-6"	3'-0"	6'-6"
	3'-0"	2'-6"	4'-6"		3'-0"	2'-6"	5'-0"x5'-0"		3'-0"	2'-6"	6'-6"x6'-6"

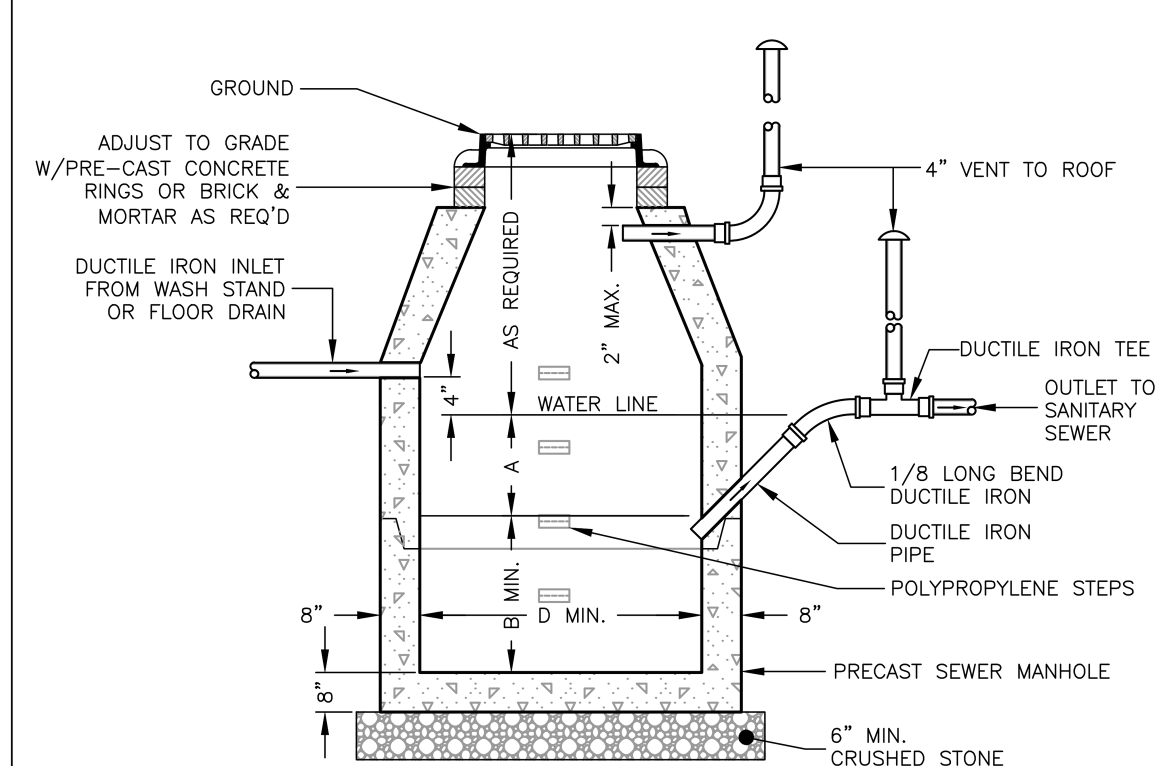

SEWER GAS TRAP
NOT TO SCALE

GENERAL CONSTRUCTION NOTES

1. MANHOLE TO BE LOCATED OUTSIDE OF BUILDING WHERE POSSIBLE, COVER TO HAVE A CENTER HOLE.
2. A TIGHT COVER MUST BE USED IF MANHOLE IS LOCATED INSIDE OF BUILDING.
3. OPENING SHALL BE NOT LESS THAN 24" DIA.
4. THE MANHOLE SHALL BE SO LOCATED AND CONSTRUCTED THAT SURFACE WATER SHALL BE EXCLUDED.
5. INLET PIPE SHALL BE AT LEAST FOUR INCHES ABOVE NORMAL WATER LINE.
6. WHERE SUBJECT TO FROST OR CRUSHING CONDITIONS, OUTLET SHALL BE AT LEAST THREE FEET BELOW THE SURFACE.
7. THE NEW MANHOLE MUST BE FILLED WITH CLEAN WATER BEFORE USING, AND AFTER BEING EMPTIED FOR PERIODIC CLEANING.
8. ALL OIL AND GASOLINE MUST BE REMOVED BEFORE CLEANING OUT THE MANHOLE, AND MUST NOT BE DISCHARGED INTO THE SEWER THROUGH OTHER FIXTURES.
9. SPECIFICATIONS FOR COVERING SPECIAL CASES OR CONDITIONS, SHALL BE APPROVED BY THE LOCAL AUTHORITIES, AND THE AUTHORITIES OF THE COMMONWEALTH OF MASSACHUSETTS.
10. POLYPROPYLENE STEPS SHALL BE SPACED ABOUT 18" APART.
11. BOTH VENTS SHALL BE EXTENDED INDEPENDENTLY 18" ABOVE THE ROOF, OR AS APPROVED BY THE LOCAL AUTHORITIES, AND THE AUTHORITIES OF THE COMMONWEALTH OF MASSACHUSETTS.

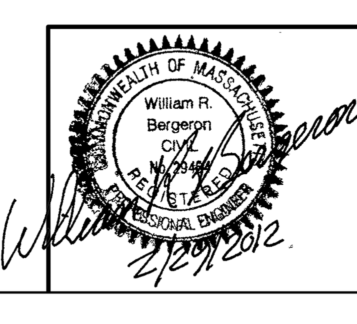

Prepared For:

Owner / Applicant
Johnson Woods Realty Corp.
c/o Glover Property Management, Inc.
8 Dooks Lane
Marblehead, MA 01945

Prepared By:

Hayes Engineering, Inc.
603 Salem Street
Wakefield, MA 01880
Ph: 781.246.2800
Fax: 781.246.7596
www.hayeseng.com

Design By: xxx
Drawn By: MEM
Checked By: WRB
Project File: REA-0316
Comp. No: REA44

☒ Issued For Permit
☐ Issued For Review
☐ Issued For Bid
☐ Issued For Construction
☐ Not For Construction

No.	Revision	Date
1	Town Comments	12/19/2011
2	Reprinted, No Changes	03/02/2012
3		
4		
5		
6		
7		
8		
9		
10		

Scale: None

Date: October 6, 2011

SITE DETAILS PLAN
JOHNSON WOODS PLANNED UNIT DEVELOPMENT (PHASE II)
READING, MASS.

Drawing No.: C20

SHEET 20 OF 22

N:\REA44\JOHNSON_WOODS_II\SPjohnson_woods_phaseII_R4.dwg, 3/6/2012 11:35:30 AM, MEM

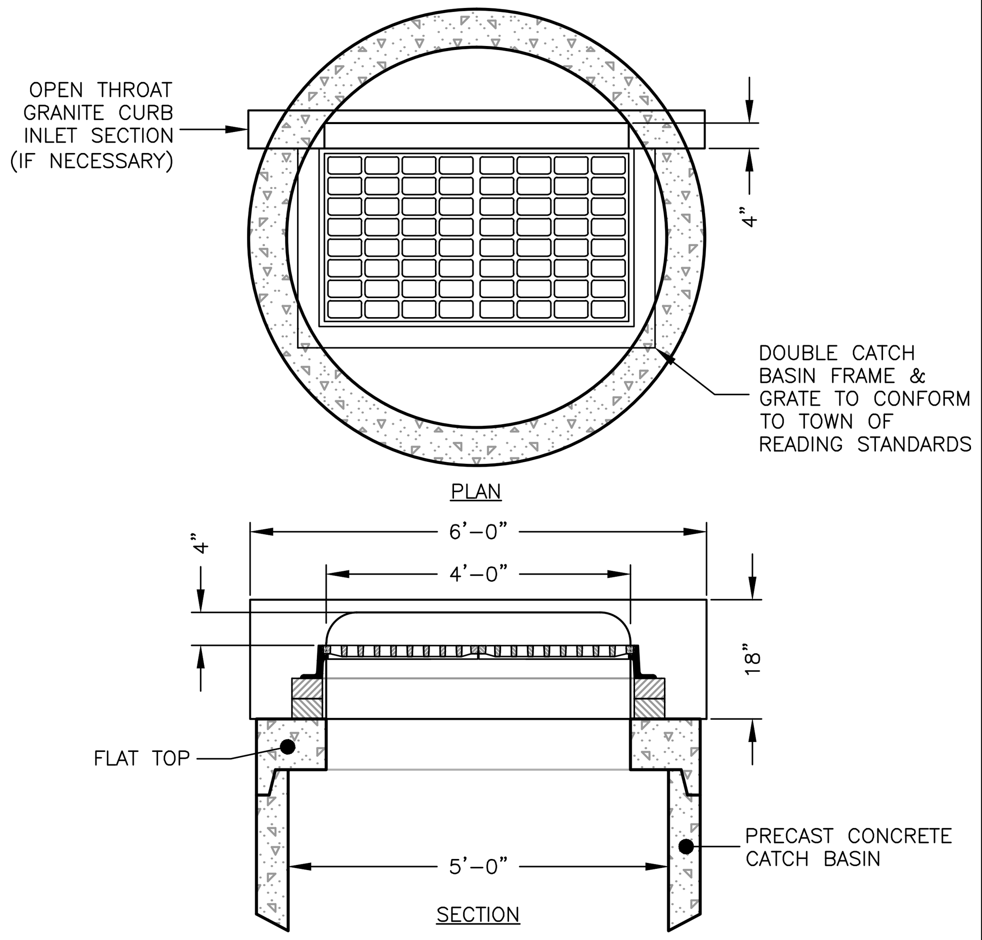

DOUBLE FRAME & GRATE
NOT TO SCALE

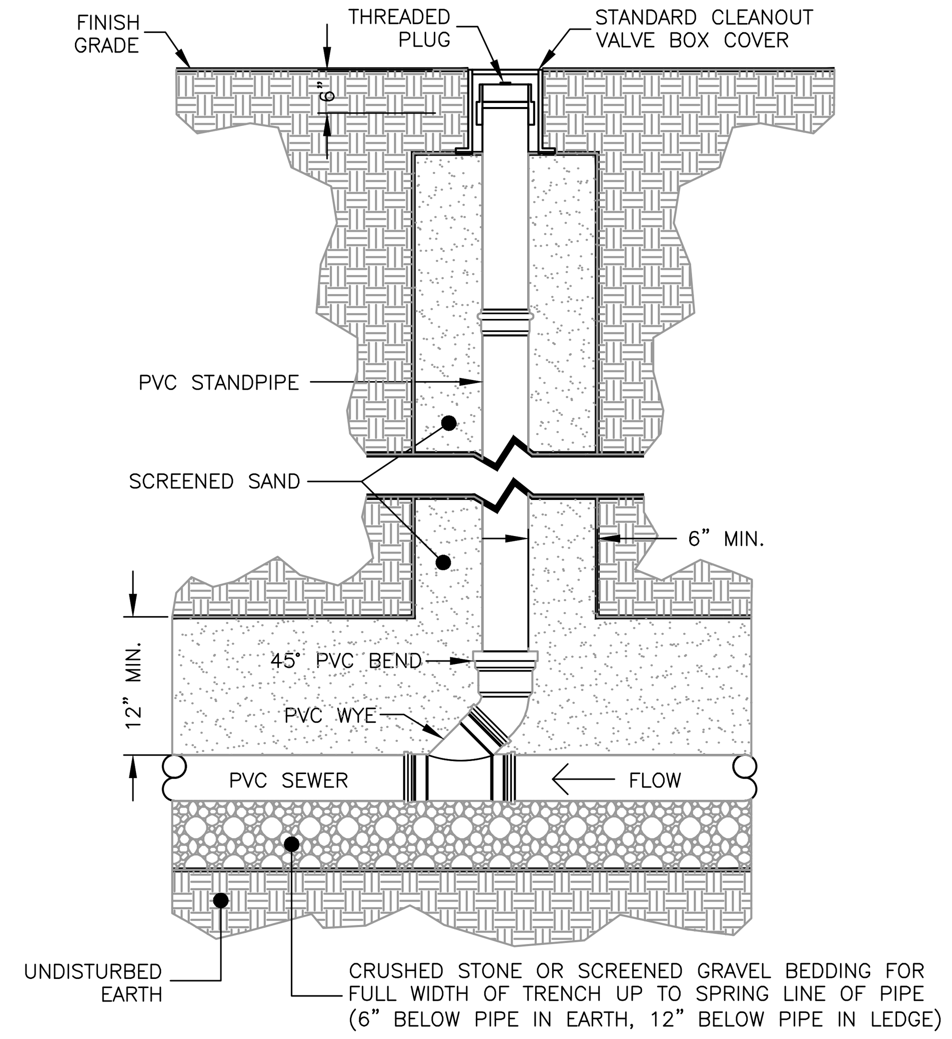

SEWER SERVICE/DRAIN CLEANOUT
NOT TO SCALE

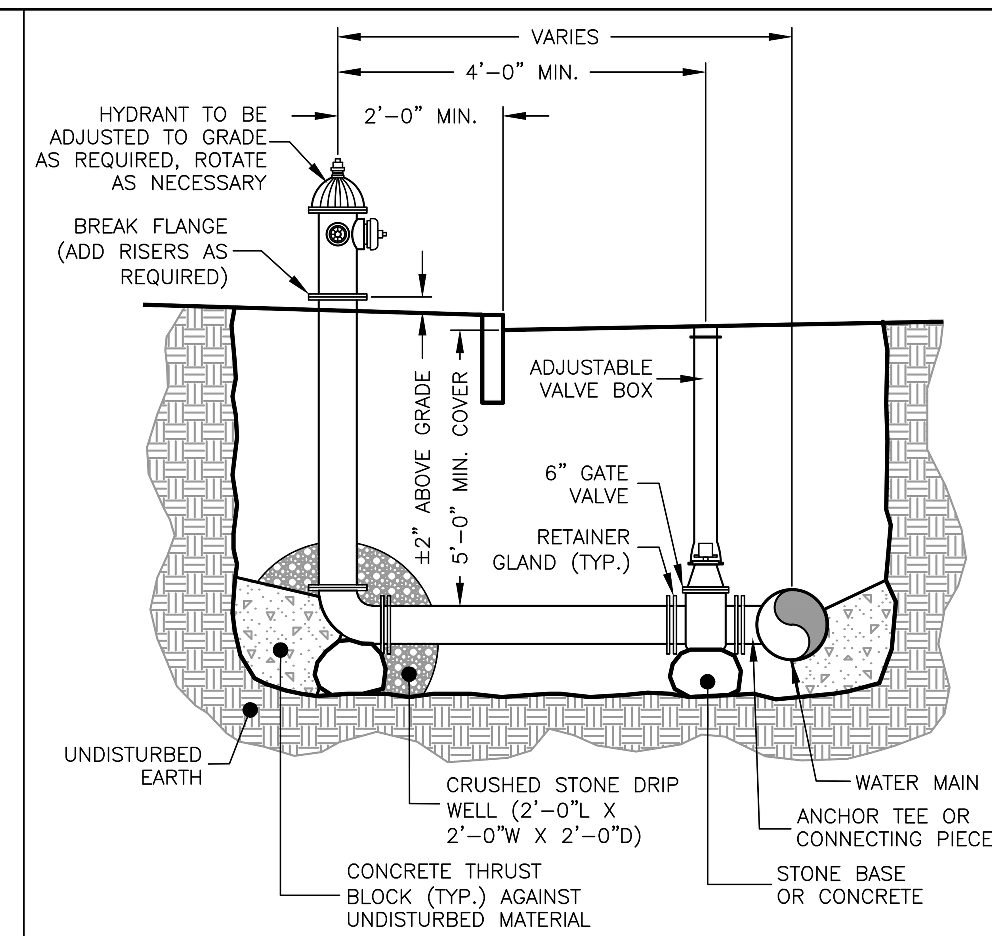

HYDRANT & VALVE BOX
NOT TO SCALE

NOTES:
1. HYDRANT INSTALLATION AND MATERIALS SHALL CONFORM TO TOWN OF READING STANDARDS.
2. WATER GATE TO BE A MINIMUM OF 4' FROM HYDRANT.
3. WATER MAIN SHALL HAVE A MINIMUM PIPE DEPTH OF 5'-0".
4. PROVIDE 4 CUBIC FEET OF SCREENED GRAVEL OR GRAVEL BACKFILL TO AT LEAST 6 INCHES ABOVE DRAIN HOLES.

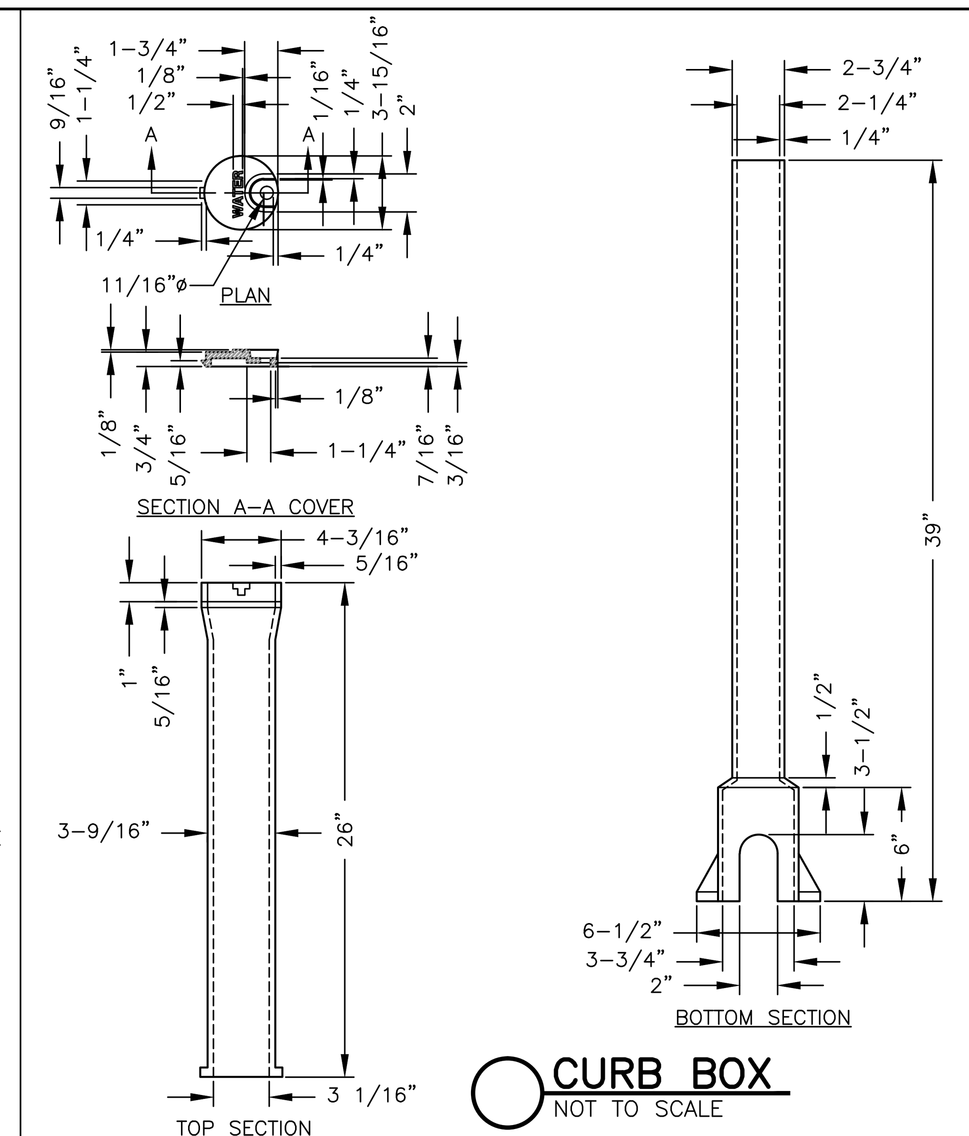

CURB BOX
NOT TO SCALE

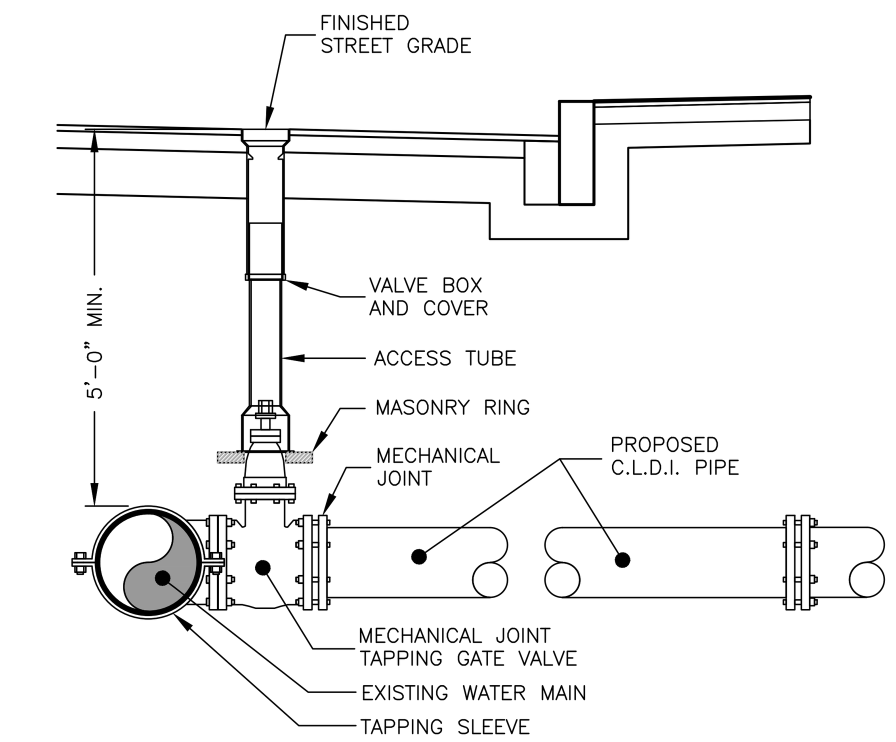

TAPPING SLEEVE & GATE
NOT TO SCALE

NOTES:
1. CONCRETE THRUST BLOCK TO BE USED ONLY WHERE IT WILL BEAR ON UNDISTURBED EARTH.
2. USE RESTRAINED JOINT FITTINGS OR TIE RODS WHERE CONCRETE THRUST BLOCK IS UNACCEPTABLE.
3. SIZE OF BLOCK OR MEGALUG TO BE DESIGNED FOR SPECIFIC CONDITIONS.

MINIMUM BEARING FACE AREA FOR CONCRETE THRUST BLOCK				
PIPE SIZE (in.)	90° BEND (s.f.)	45° BEND (s.f.)	22.5° BEND (s.f.)	TEES,PLUGS,CAPS & HYDRANTS (s.f.)
6	8	5	3	4
8	12	8	5	6
10	19	13	7	9
12	26	18	10	13

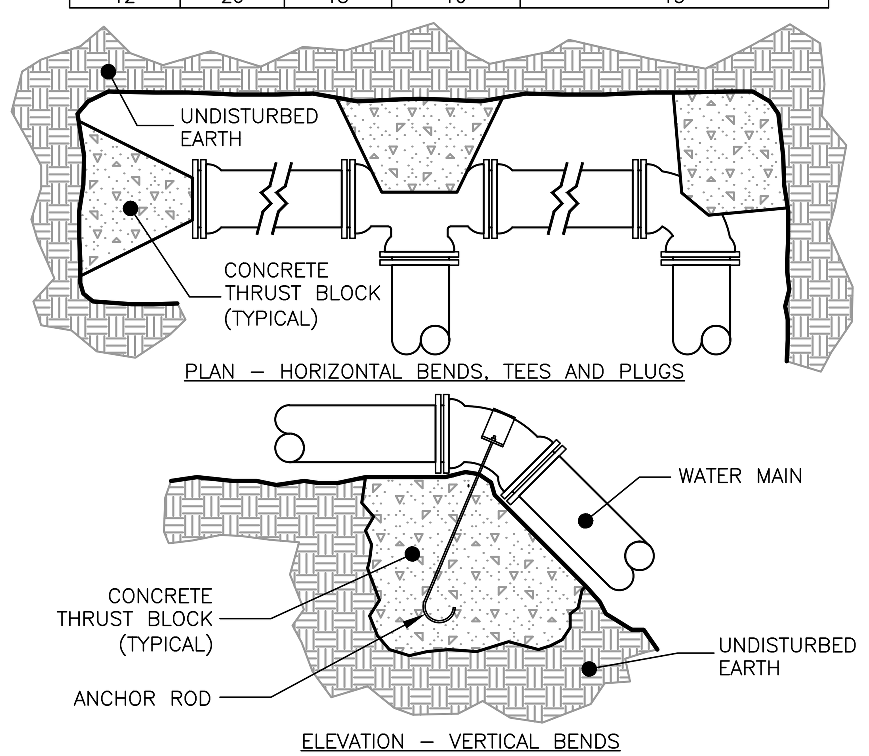

THRUST BLOCK
NOT TO SCALE

NOTES:
1. THRUST BLOCKS TO BE 3000 PSI CONCRETE PLACED AGAINST UNDISTURBED MATERIAL. KEEP CONCRETE CLEAR OF MECHANICAL JOINTS.
2. STONE BACKING MAY BE SUBSTITUTED FOR CONCRETE THRUST BLOCKS PROVIDED THE STONE(S) ARE OF EQUAL SIZE AND BEAR ON UNDISTURBED EARTH.
3. USE OF JOINT RESTRAINT SYSTEMS SHALL NOT ELIMINATE THRUST BLOCK REQUIREMENTS (WHERE POSSIBLE).

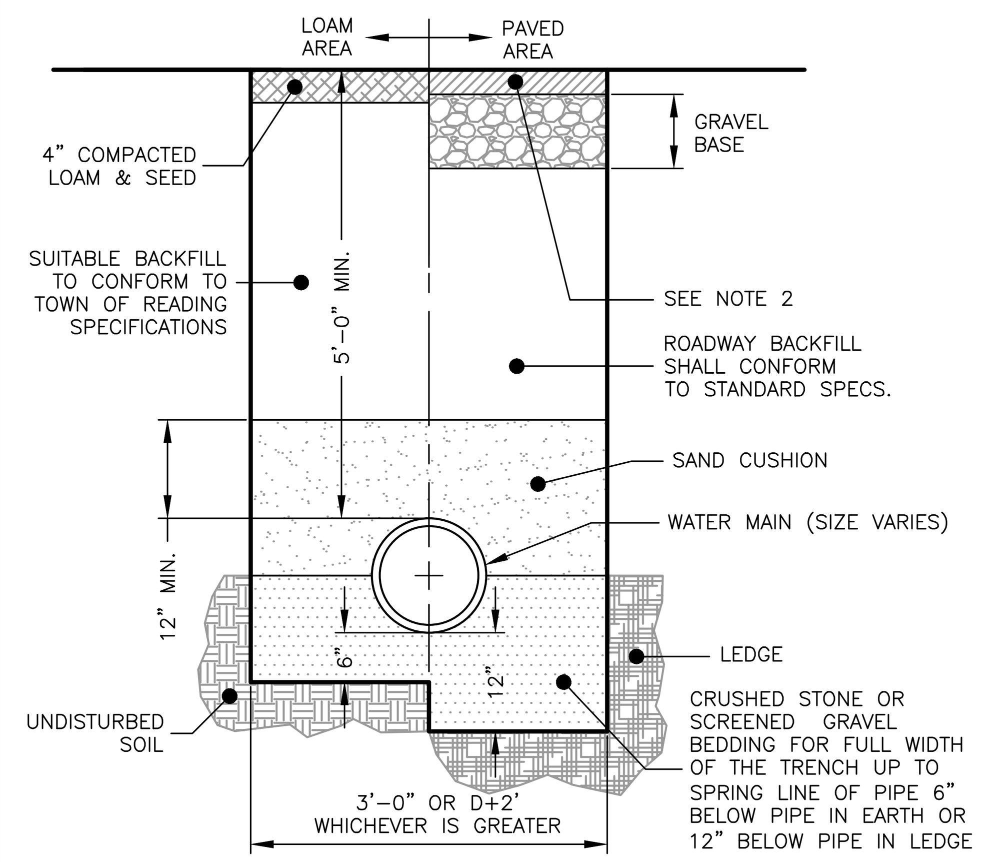

WATER TRENCH
NOT TO SCALE

NOTES:
1. ALL MATERIAL SHALL CONFORM TO THE TOWN OF READING DEPARTMENT OF PUBLIC WORKS.
2. NEW ROADWAY CONSTRUCTION SHALL CONFORM TOWN SPECIFICATIONS.
3. IN LIEU OF THE 12" GRAVEL COURSE AND 9" OF CRUSHED GRAVEL, 18" OF CRUSHED GRAVEL OR RECLAIMED STABILIZED BASE MAY BE USED AS A BASE FOR THE PAVEMENT REPAIR.
4. MATERIAL SHALL BE REPLACED IN KIND WHENEVER POSSIBLE.
5. A MINIMUM 2' CUTBACK IS REQUIRED AT THE TOP OF THE TRENCH WALL OVER UNDISTURBED MATERIAL.

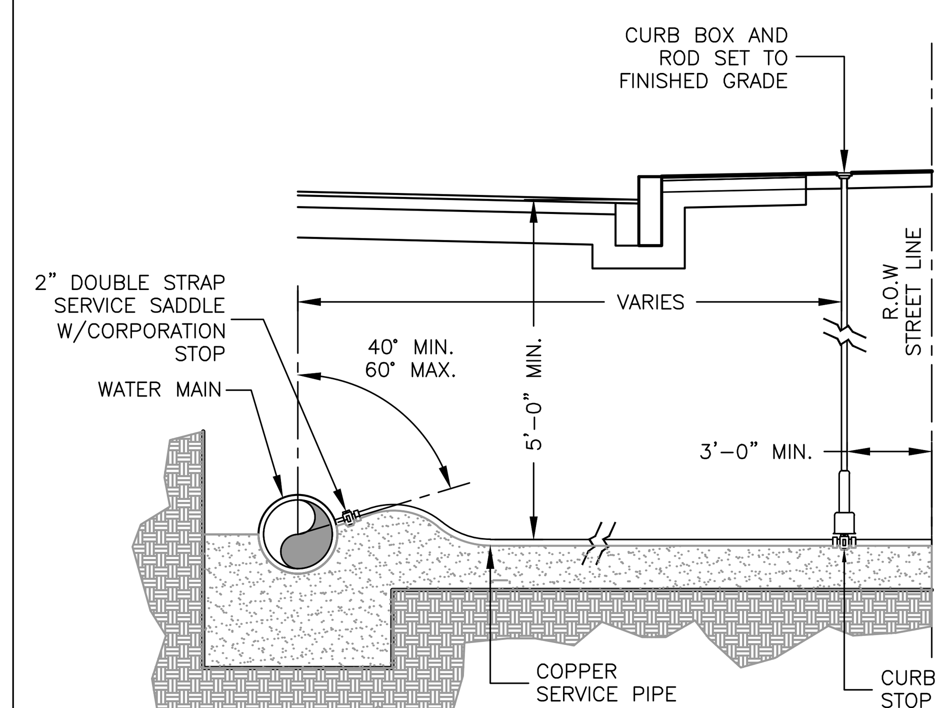

WATER SERVICE CONNECTION
NOT TO SCALE

NOTES:
1. CORPORATIONS 1-1/2" DIA. AND GREATER SHALL BE INSTALLED USING A TAPPING SADDLE AND SHELL CUTTER.
2. WHERE WATER SERVICE MUST CROSS SEWER MAIN, MAINTAIN A MINIMUM 18" CLEARANCE ABOVE THE SEWER MAIN WHILE MAINTAINING A DEPTH OF 5'-0" BELOW SURFACE. TO MAINTAIN 18" OF CLEARANCE FROM SEWER, THE 5'-0" DEPTH MAY BE REDUCED BY INSTALLING A 2" LAYER OF RIGID FOAM INSULATION ABOVE THE WATER SERVICE FOR EVERY FOOT THE DEPTH IS REDUCED.
3. ACTUAL SERVICE LOCATIONS WILL BE DETERMINED IN FIELD TO SAVE SPECIMEN TREES.

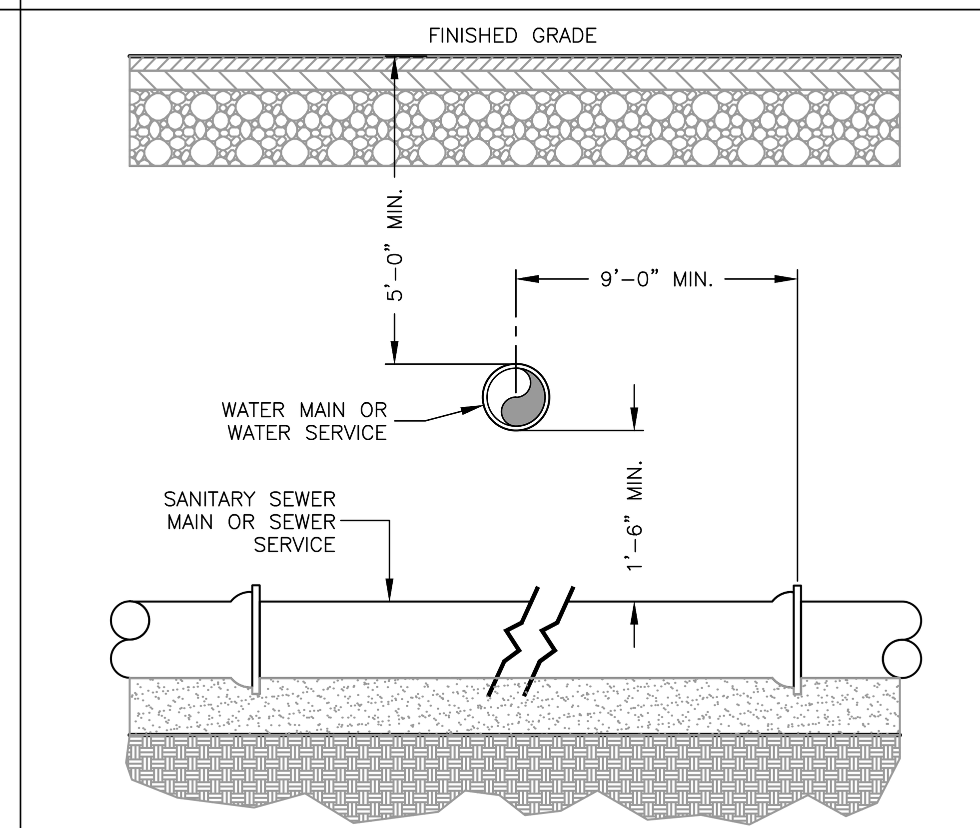

WATER/SEWER CROSSING
NOT TO SCALE

NOTES:
1. WHEREVER FEASIBLE, SEWERS WILL BE LAID AT A MINIMUM OF 10 FEET, HORIZONTALLY, FROM ANY EXISTING OR PROPOSED WATER MAIN. SHOULD LOCAL CONDITIONS PREVENT A LATERAL SEPARATION OF 10 FEET TO A WATER MAIN THE SEWER MAIN WILL BE LAID IN A SEPARATE TRENCH AND THE ELEVATION OF THE CROWN OF THE SEWER PLACED AT LEAST 18 INCHES BELOW THE INVERT OF THE WATER MAIN. WHENEVER SEWERS MUST CROSS UNDER WATER MAINS, THE SEWER SHALL BE LAID AT SUCH AN ELEVATION THAT THE CROWN OF THE SEWER IS AT LEAST 18 INCHES BELOW THE INVERT OF THE WATER MAIN. WHEN IT IS IMPOSSIBLE TO OBTAIN HORIZONTAL OR VERTICAL SEPARATION AS STIPULATED ABOVE, BOTH THE WATER MAIN AND SEWER SHOULD BE ENCASED IN CONCRETE FOR 10 FEET EITHER SIDE OF THE CROSSING.
2. IN LOCATIONS WHERE THE SEWER MAIN DOES NOT HAVE 48" OF COVER THE MAIN WILL BE INSULATED.

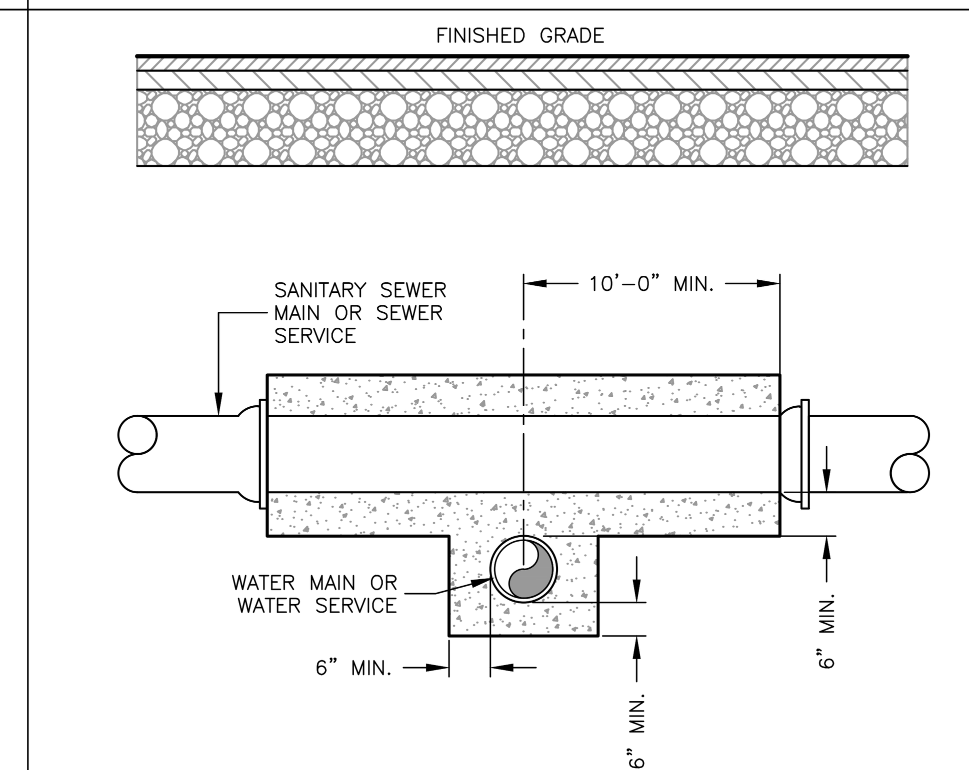

WATER/SEWER CROSSING
NOT TO SCALE

NOTES:
1. WHEREVER FEASIBLE, SEWERS WILL BE LAID AT A MINIMUM OF 10 FEET, HORIZONTALLY, FROM ANY EXISTING OR PROPOSED WATER MAIN. SHOULD LOCAL CONDITIONS PREVENT A LATERAL SEPARATION OF 10 FEET TO A WATER MAIN THE SEWER MAIN WILL BE LAID IN A SEPARATE TRENCH AND THE ELEVATION OF THE CROWN OF THE SEWER PLACED AT LEAST 18 INCHES BELOW THE INVERT OF THE WATER MAIN. WHENEVER SEWERS MUST CROSS UNDER WATER MAINS, THE SEWER SHALL BE LAID AT SUCH AN ELEVATION THAT THE CROWN OF THE SEWER IS AT LEAST 18 INCHES BELOW THE INVERT OF THE WATER MAIN. WHEN IT IS IMPOSSIBLE TO OBTAIN HORIZONTAL OR VERTICAL SEPARATION AS STIPULATED ABOVE, BOTH THE WATER MAIN AND SEWER SHOULD BE ENCASED IN CONCRETE FOR 10 FEET EITHER SIDE OF THE CROSSING.
2. IN LOCATIONS WHERE THE SEWER MAIN DOES NOT HAVE 48" OF COVER THE MAIN WILL BE INSULATED.

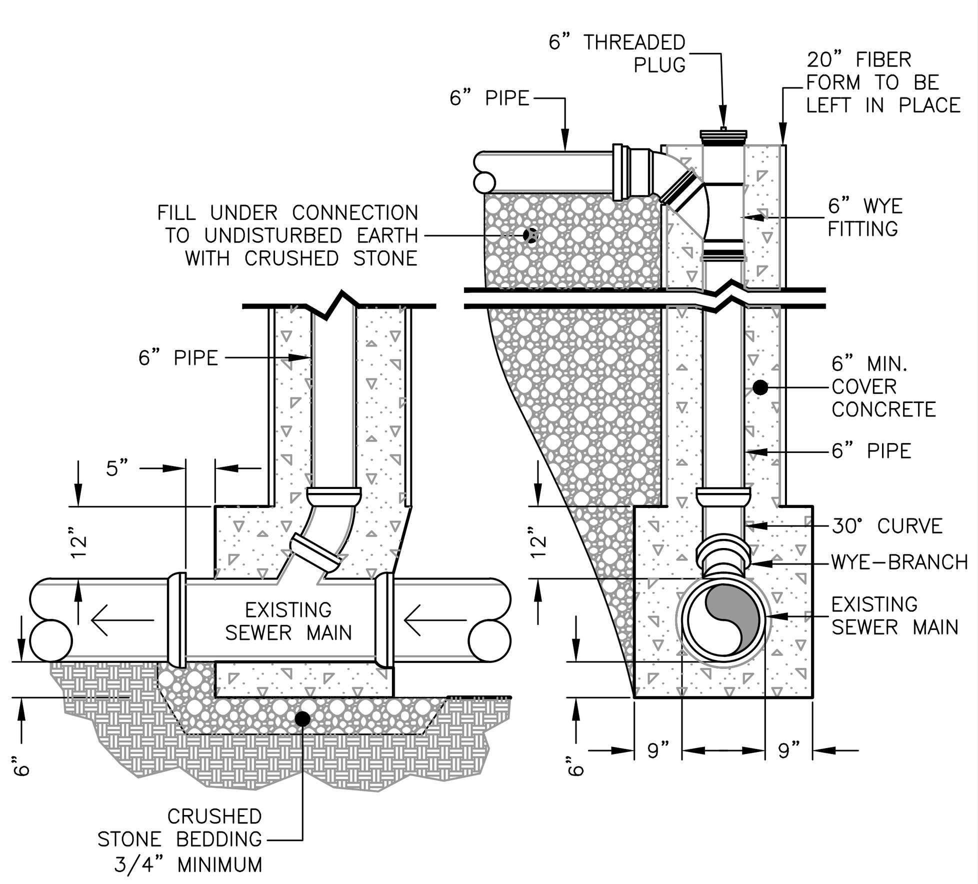

SEWER CHIMNEY
NOT TO SCALE

NOTE:
A DROP ENTRY PIPE SHALL BE PROVIDED FOR ANY SEWER ENTERING A MANHOLE AT AN ELEVATION OF 24 INCHES OR MORE ABOVE THE MANHOLE INVERT.

DIA	W	A	B	D	E	P	DIA+1"	R1	R2	SLOPE
12"	2"	4"	2'-0"	6'-0"	2'-0"	19-15/16"	13"	10-1/8"	9"	1V:3H
15"	2-1/4"	6"	2'-3"	6'-0"	2'-6"	24-5/16"	16"	12-1/2"	11"	1V:3H
18"	2-1/2"	9"	2'-3"	6'-0"	3'-0"	29"	19"	15-1/2"	12"	1V:3H
24"	3"	9-1/2"	3'-7 1/2"	6'-0"	4'-0"	33-3/16"	25"	16-13/16"	14"	1V:3H
36"	4"	15"	5'-3"	8'-0"	6'-0"	47-13/16"	37"	24-5/16"	20"	1V:3H
48"	5"	24"	6'-0"	8'-0"	7'-0"	56-1/2"	49"	28-1/2"	22"	1V:3H

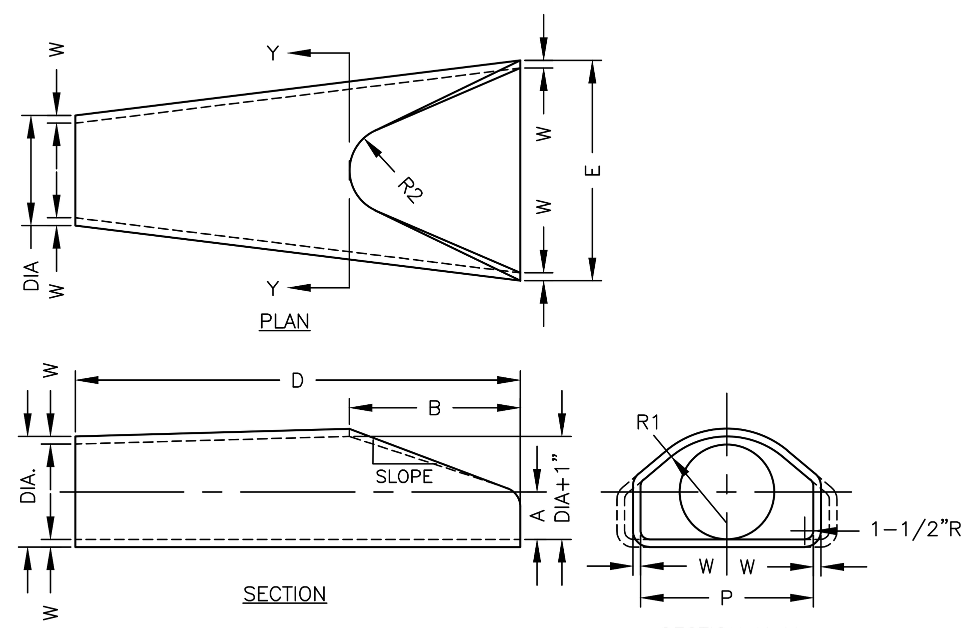

REINFORCED CONCRETE FLARED END SECTION
NOT TO SCALE

# DROPS	d	D	# DROPS	d	D
1	8"	4'	1	15"	5'
2	8"OR10"	5'	1	18"	6'
1	12"	5'	1	24"	6'

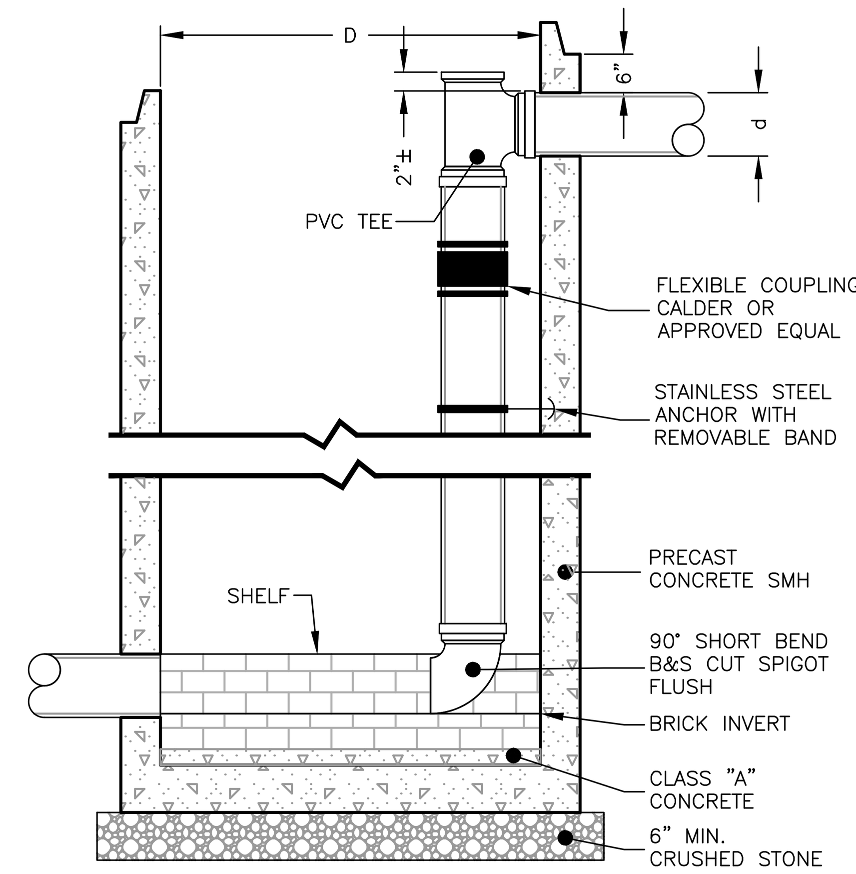

INSIDE DROP SEWER CONNECTION
NOT TO SCALE

NOTE:
A DROP ENTRY PIPE SHALL BE PROVIDED FOR ANY SEWER ENTERING A MANHOLE AT AN ELEVATION OF 24 INCHES OR MORE ABOVE THE MANHOLE INVERT.

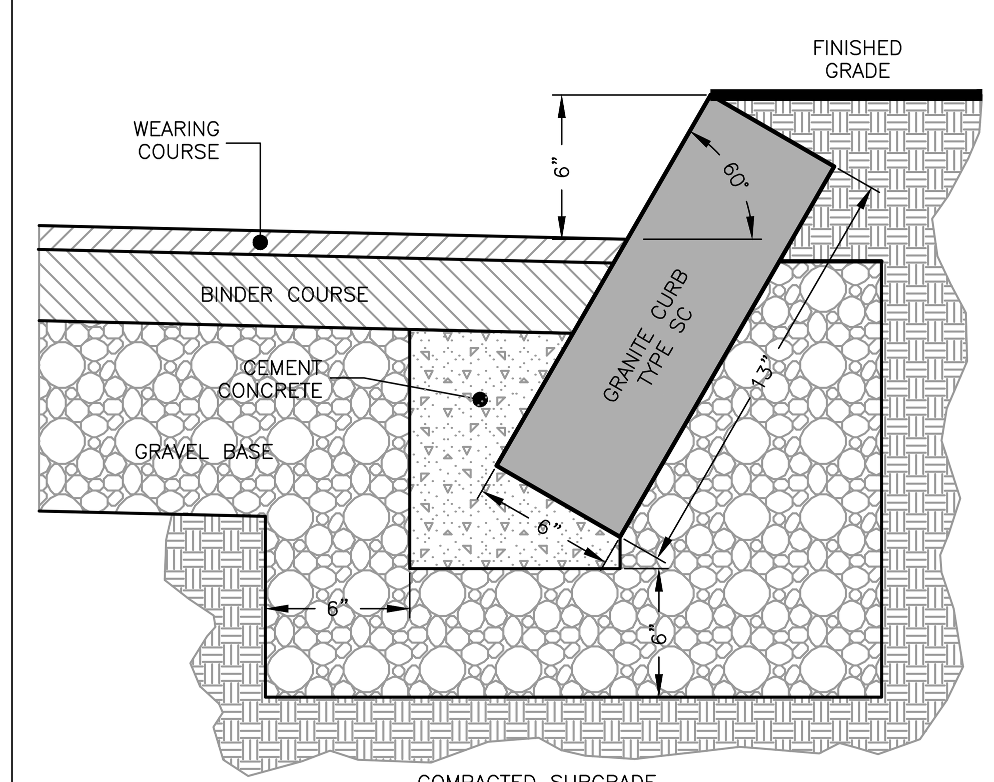

SLOPED GRANITE CURB
NOT TO SCALE

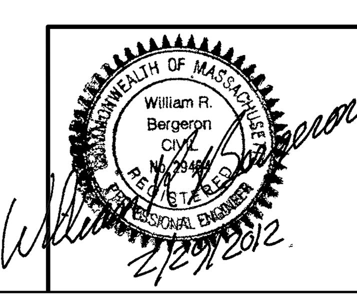

Prepared For:

Owner / Applicant

Johnson Woods Realty Corp.
c/o Glover Property Management, Inc.
8 Doaks Lane
Marblehead, MA 01945

Prepared By:

Hayes Engineering, Inc.
603 Salem Street
Wakefield, MA 01880
Ph: 781.246.2800
Fax: 781.246.7596
www.hayeseng.com

Design By: xxx
Drawn By: MEM
Checked By: WRB
Project File: REA-0316
Comp. No: REA44

☒ Issued For Permit
☐ Issued For Review
☐ Issued For Bid
☐ Issued For Construction
☐ Not For Construction

No.	Revision	Date
1	Town Comments	12/19/2011
2	Reprinted, No Changes	03/02/2012
3		
4		
5		
6		
7		
8		
9		
10		

Scale: None

Date: October 6, 2011

SITE DETAILS PLAN
JOHNSON WOODS
PLANNED UNIT DEVELOPMENT (PHASE II)
READING, MASS.

Drawing No.:

C21

SHEET 21 OF 22

N:\REA44\JOHNSON_WOODS_II\SPjohnson_woods_phaseII_R4.dwg, 3/6/2012 11:35:35 AM, MEM

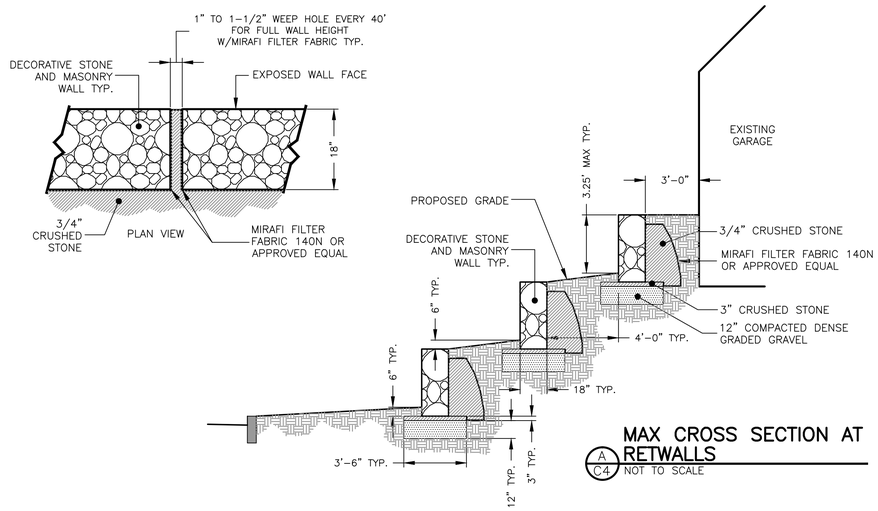

MAX CROSS SECTION AT RETWALLS

A / C4 NOT TO SCALE

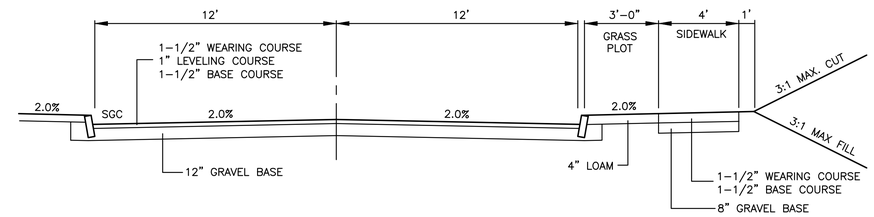

ROADWAY CROSS SECTION

NOT TO SCALE

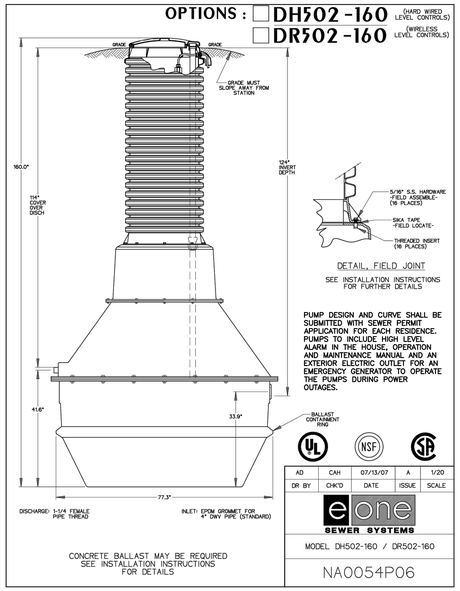

E/ONE PUMP @ GREEN MEADOW DRIVE

NOT TO SCALE

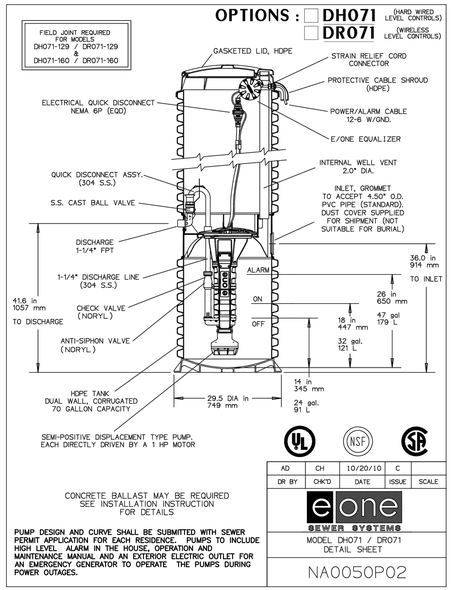

E/ONE PUMP @ BUILDING 68

NOT TO SCALE

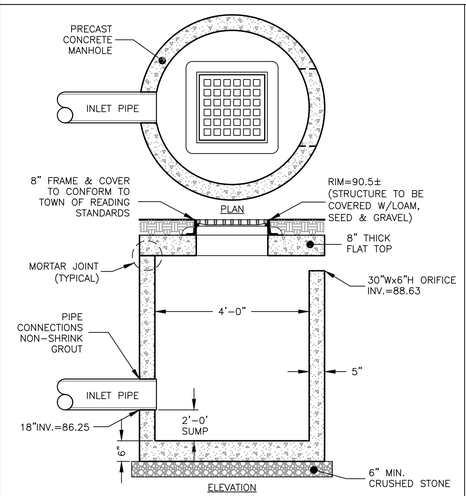

RES06 OUTLET CONTROL STRUCTURE

NOT TO SCALE

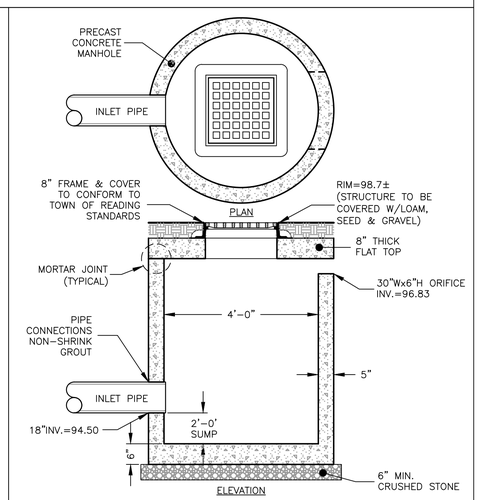

RES05 OUTLET CONTROL STRUCTURE

NOT TO SCALE

Prepared For:

Owner / Applicant

Johnson Woods Realty Corp.
c/o Glover Property Management, Inc.
8 Dooks Lane
Marblehead, MA 01945

Prepared By:

Hayes Engineering, Inc.
495 Salem Street
Wakefield, MA 01880
Ph: 781.246.2800
Fax: 781.246.7596
www.hayeseng.com

Design By: xxx
Drawn By: MEM
Checked By: WRB
Project File: REA-0316
Comp. No: REA44

- ☒ Issued For Permit
- ☐ Issued For Review
- ☐ Issued For Bid
- ☐ Issued For Construction
- ☐ Not For Construction

No.	Revision	Date
10		
9		
8		
7		
6		
5		
4		
3	Reprinted, No Changes	03/02/2012
2	Town Comments	12/19/2011
1		

Scale: None40'

Date: October 6, 2011

SITE DETAILS PLAN
JOHNSON WOODS
PLANNED UNIT DEVELOPMENT
(PHASE II)
READING, MASS.

COMMONWEALTH OF MASSACHUSETTS
William R. Bergeron
No. 31671
REGISTERED PROFESSIONAL ENGINEER
2/29/2012

Drawing No.:

C22

SHEET 22 OF 22

N:\REA44\JOHNSON_WOODS_II\SPjohnson_woods_phaseII_R4.dwg, 3/6/2012 11:35:40 AM, MEM