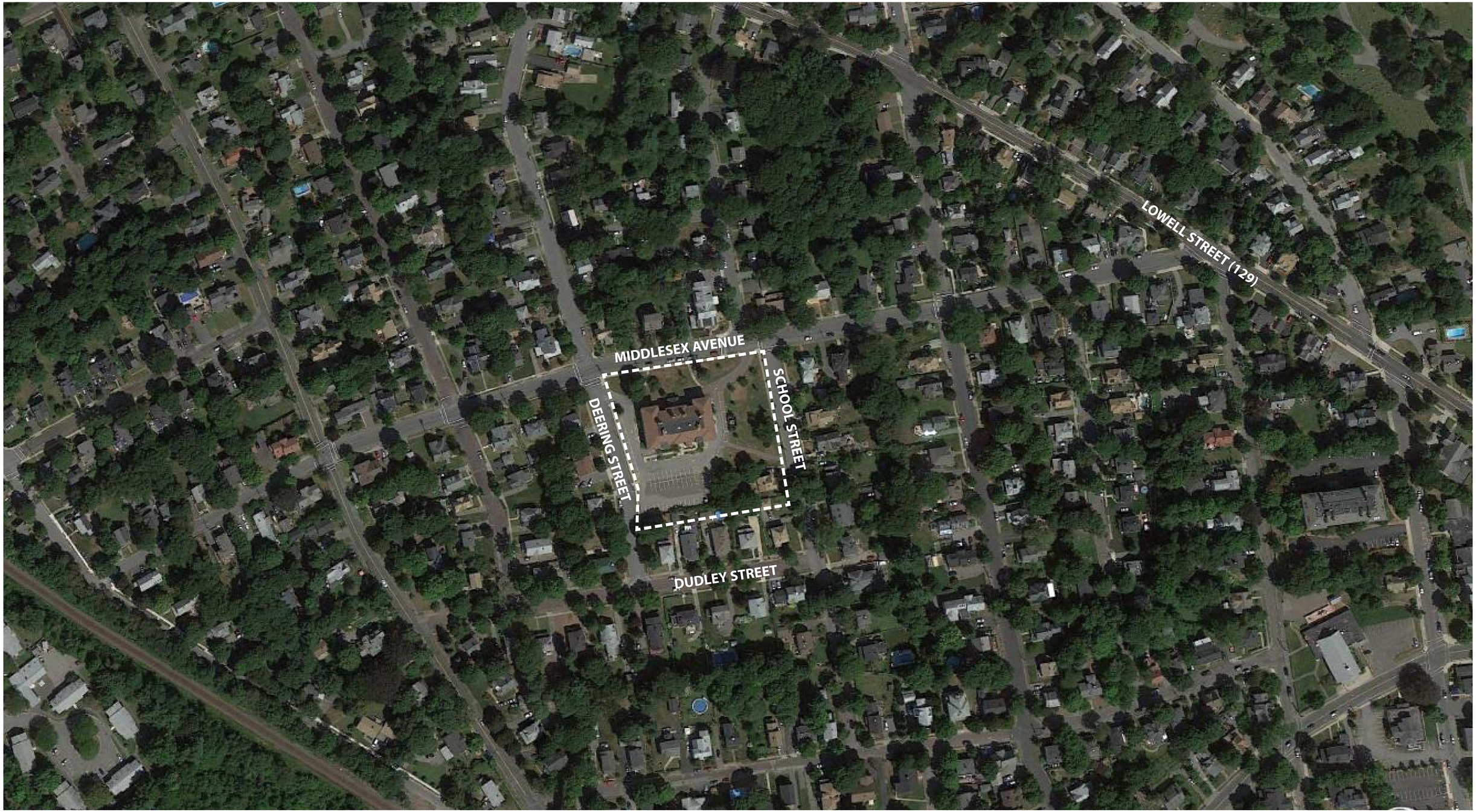

SITE PLAN 1″ = 80′-0″

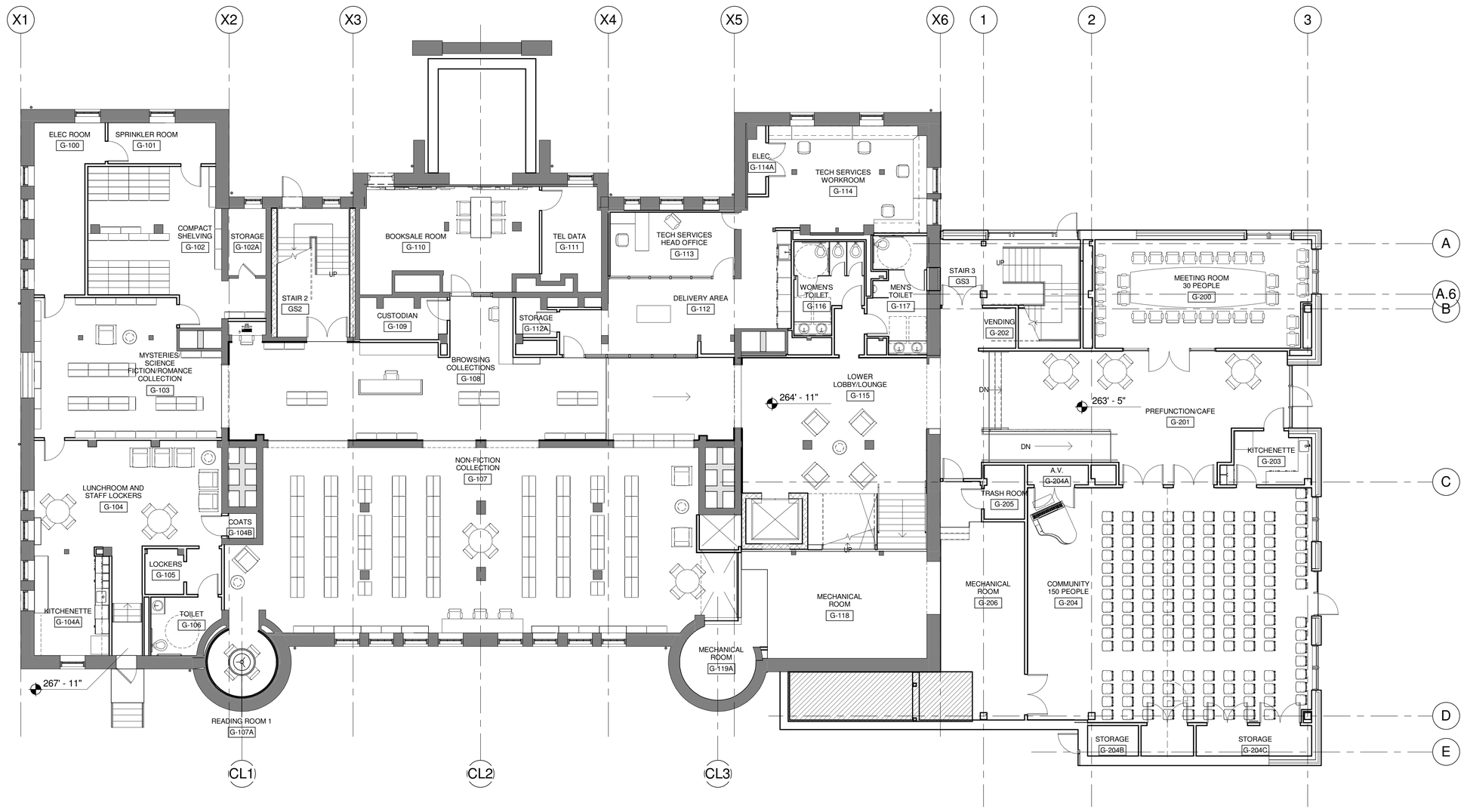

GROUND FLOOR PLAN 1/8" = 1'-0"

Reading Public Library

64 Middlesex Avenue, Reading, MA
04.28.2014

cbt

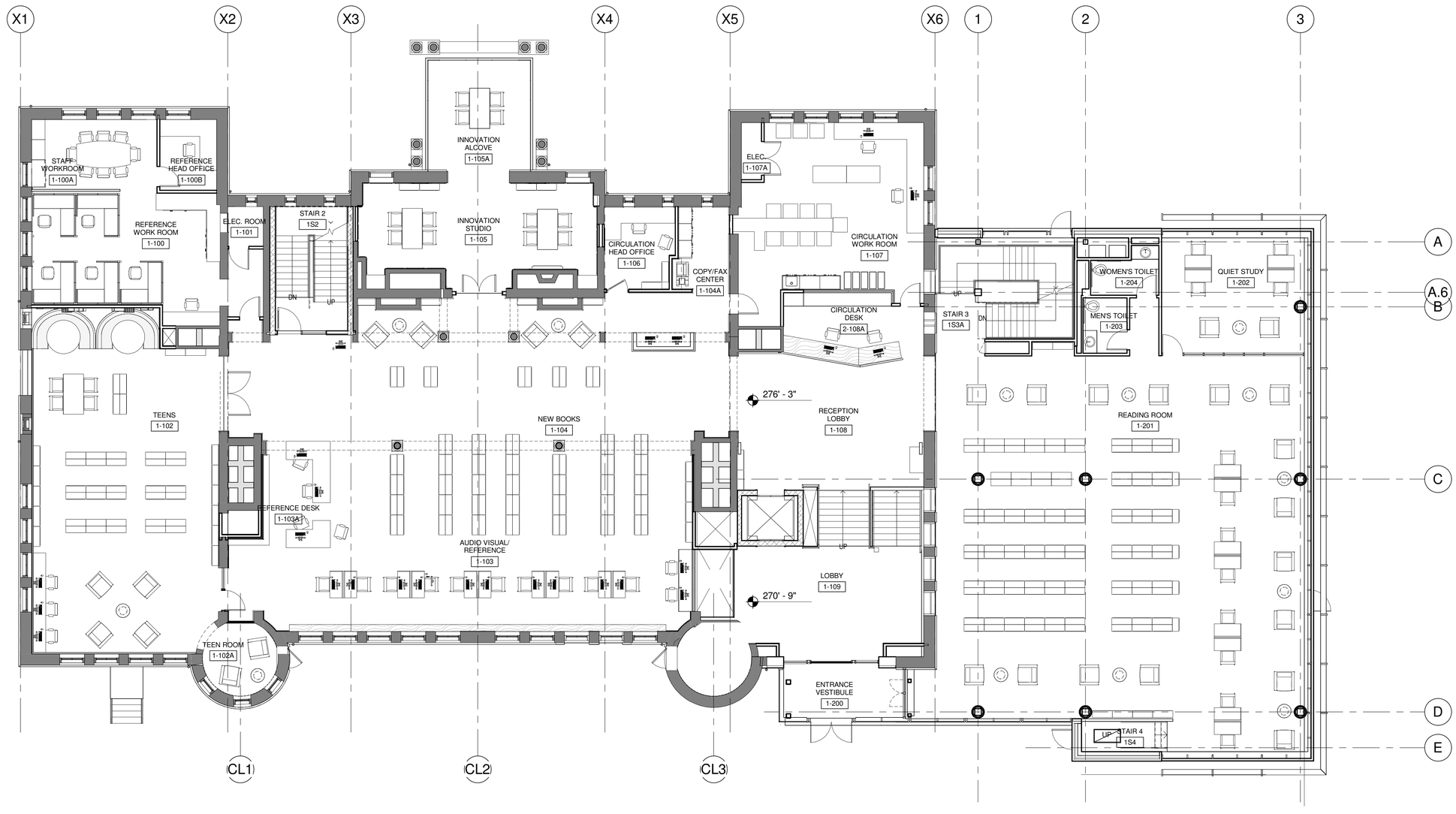

FIRST FLOOR PLAN 1/8" = 1'-0"

Reading Public Library

64 Middlesex Avenue, Reading, MA
04.28.2014

cbt

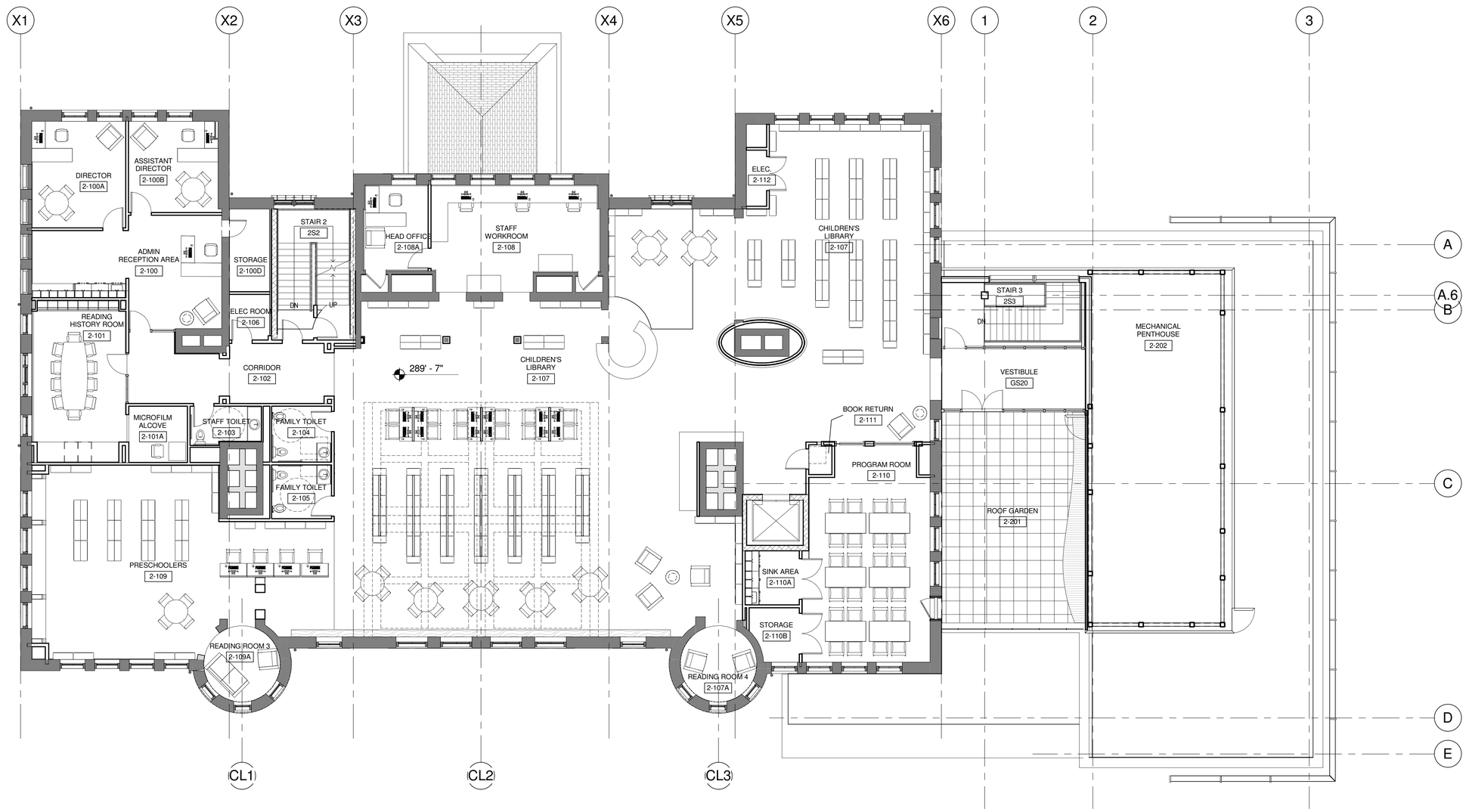

SECOND FLOOR PLAN 1/8" = 1'-0"

Reading Public Library

64 Middlesex Avenue, Reading, MA
04.28.2014

cbt

SOUTH ELEVATION

EAST ELEVATION

NORTH ELEVATION

WEST ELEVATION

Reading Public Library

64 Middlesex Avenue, Reading, MA
04.28.2014

cbt

SOUTH ELEVATION

UTILITY INFORMATION

DMH 1
RIM ELEV. 251.59
8" INV. IN 247.49
12" INV. OUT 246.17

DMH 2
RIM ELEV. 270.05
5" INV. IN 267.92
5" INV. OUT 267.84

DMH 4
RIM ELEV. 269.55
4" INV. IN 266.22
6" INV. IN 264.27
6" INV. OUT 264.14

DMH 5
RIM ELEV. 269.84
4" INV. IN 265.67
6" INV. IN 264.01
6" INV. OUT 263.91

DMH 6
RIM ELEV. 270.00
4" INV. IN 266.68
6" INV. IN 263.37
6" INV. OUT 263.02

DMH 7
RIM ELEV. 270.00
6" INV. IN 262.40
6" INV. OUT 262.32

DMH 3 (OLD CESSPOOL)

SMH 1
RIM ELEV. 253.61
INV. OUT 247.50

SMH 2
RIM ELEV. 259.71
INV. IN 253.60
INV. OUT 253.60

SMH 3
RIM ELEV. 263.45
INV. IN 256.97
INV. IN 256.97
INV. OUT 255.97

SMH 4
RIM ELEV. 265.99
INV. OUT 253.60

CB 1
RIM ELEV. 265.78
8" INV. IN 257.67
8" INV. OUT 257.47
6" INV. IN 257.76

CB 2
RIM ELEV. 266.31
8" INV. IN 259.80
8" INV. OUT 259.71

CB 3
RIM ELEV. 266.15
6" INV. IN 260.86
8" INV. OUT 260.83

CB 4
RIM ELEV. 268.72
6" INV. IN 263.52
6" INV. OUT 263.34

CB 5
RIM ELEV. 269.11
4" INV. IN 265.55
6" INV. IN 264.49
6" INV. OUT 264.51

CB 6
RIM ELEV. 267.84
4" INV. OUT 267.20

CB 7
RIM ELEV. 269.15
5" INV. IN 266.33
5" INV. IN 266.25
6" INV. IN 265.32
6" INV. OUT 265.32

CB 8
RIM ELEV. 268.59
6" INV. IN 266.10
6" INV. OUT 265.68

CB 9
RIM ELEV. 268.36
6" INV. IN 266.72
6" INV. OUT 266.76

CB 10
RIM ELEV. 269.34
4" INV. IN 267.05
5" INV. IN 267.05
6" INV. OUT 267.00

CB 11
RIM ELEV. 270.71
4" INV. IN 268.03
4" INV. IN 268.03
4" INV. IN 268.02
4" INV. OUT 268.03

CB 12
RIM ELEV. 270.43
4" PVC INV. IN 268.31
4" VC INV. IN 268.13
4" VC INV. IN 268.13
4" VC INV. OUT 268.10

CB 13
RIM ELEV. 268.13
4" INV. IN 265.48
6" INV. OUT 265.15

CB 14
RIM ELEV. 269.41
4" INV. IN 264.36
6" INV. IN 261.08
6" INV. OUT 261.12

CB 15
RIM ELEV. 267.89
4" INV. OUT 267.10

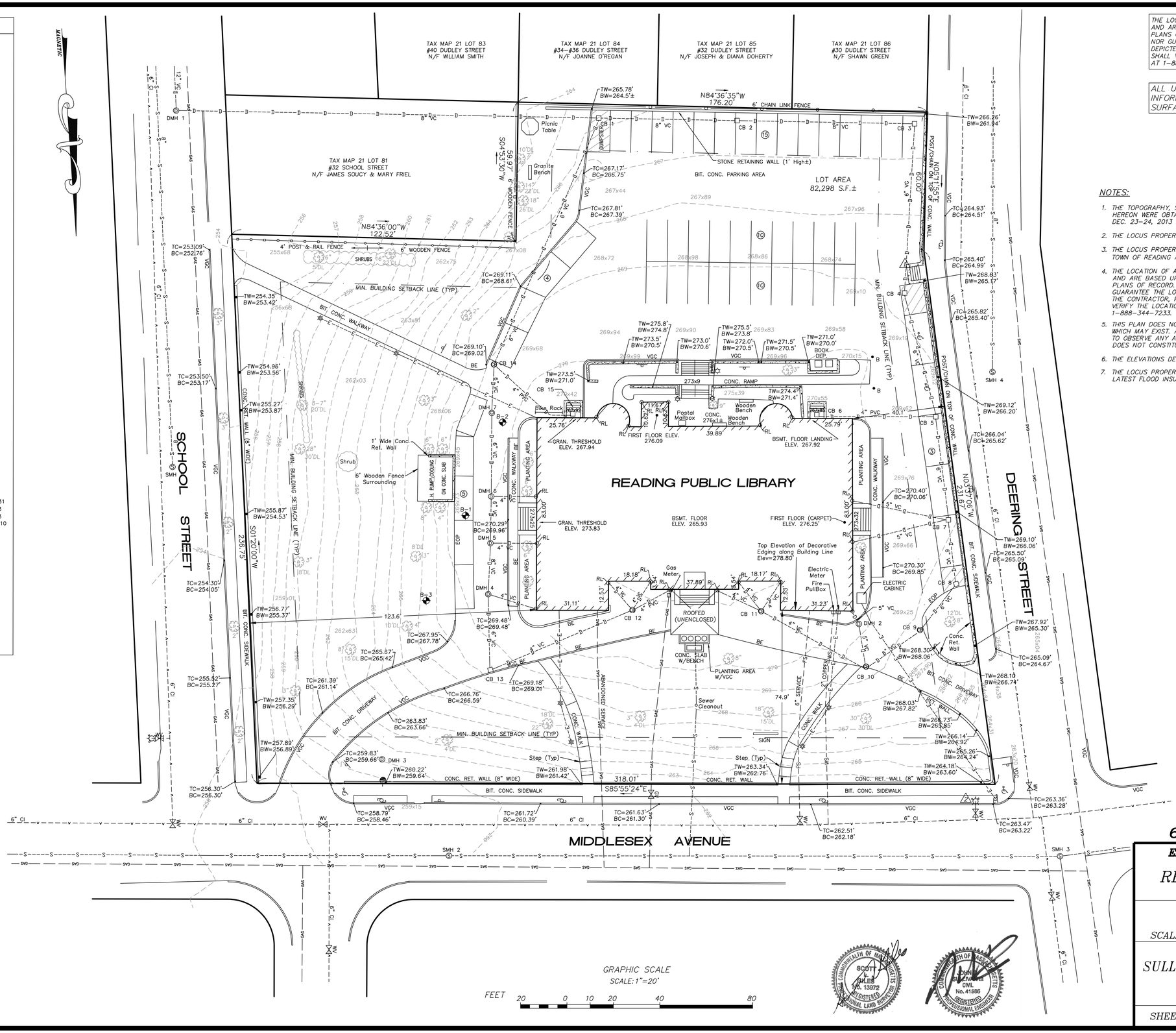

THE LOCATION OF ALL UNDERGROUND UTILITIES SHOWN ARE APPROXIMATE AND ARE BASED UPON A PARTIAL FIELD SURVEY AND COMPILATION OF PLANS OF RECORD. THE DESIGN ENGINEER DOES NOT WARRANTY NOR GUARANTEE THE LOCATION OF ALL UTILITIES DEPICTED OR NOT DEPICTED. THE CONTRACTOR, PRIOR TO COMMENCEMENT OF CONSTRUCTION, SHALL VERIFY THE LOCATION OF ALL UTILITIES AND CONTACT DIG SAFE AT 1-888-344-7233.

ALL UNDERGROUND UTILITY DATA REPRESENTS RECORD INFORMATION RECOVERED THROUGH RESEARCH WITHOUT SURFACE DEMARCATION NOR SUBSURFACE VERIFICATION.

TEMPORARY BENCHMARK CHART:

TBM #	DESCRIPTION	ELEV.
1	PK NAIL	268.66'
2	HYDRANT CAP NUT (STREET SIDE)	265.09'

NOTES:

1. THE TOPOGRAPHY, SITE DETAIL & SURFACE IMPROVEMENTS DEPICTED HEREON WERE OBTAINED FROM A PARTIAL FIELD SURVEY CONDUCTED ON DEC. 23-24, 2013 BY SULLIVAN ENGINEERING GROUP, LLC.
2. THE LOCUS PROPERTY DEPICTED IS LOCATED IN ZONING DISTRICT S-15.
3. THE LOCUS PROPERTY IS DEPICTED AS LOT 80+87 ON THE TOWN OF READING ASSESSOR'S MAP 21..
4. THE LOCATION OF ALL UNDERGROUND UTILITIES SHOWN ARE APPROXIMATE AND ARE BASED UPON A PARTIAL FIELD SURVEY AND COMPILATION OF PLANS OF RECORD. THE DESIGN ENGINEER DOES NOT WARRANTY NOR GUARANTEE THE LOCATION OF ALL UTILITIES DEPICTED OR NOT DEPICTED. THE CONTRACTOR, PRIOR TO COMMENCEMENT OF CONSTRUCTION, SHALL VERIFY THE LOCATION OF ALL UTILITIES AND CONTACT DIG SAFE AT 1-888-344-7233.
5. THIS PLAN DOES NOT SHOW ANY UNRECORDED OR UNWRITTEN EASEMENTS WHICH MAY EXIST. A REASONABLE AND DILIGENT ATTEMPT HAS BEEN MADE TO OBSERVE ANY APPARENT, VISIBLE USES OF THE LAND; HOWEVER, THIS DOES NOT CONSTITUTE A GUARANTEE THAT NO SUCH EASEMENTS EXIST.
6. THE ELEVATIONS DEPICTED HEREON WERE BASED UPON THE READING SEWER DATUM.
7. THE LOCUS PROPERTY IS NOT LOCATED WITHIN A FLOOD ZONE AS DEPICTED ON THE LATEST FLOOD INSURANCE RATE MAP.

LEGEND:

CONTOUR	100
DRAIN LINE	D
SEWER LINE	S
WATER LINE	W
ELEC. CONDUIT	E
SEWER MANHOLE	S
DRAIN MANHOLE	D
CATCH BASIN	
HYDRANT	
GATE VALVE	
POLE/LIGHT	
BOLLARD LIGHT	
BITUMINOUS CONCRETE CURBING	BCC
VERTICAL GRANITE CURBING	VGC
BRICK EDGING	BE
EDGE OF PAVEMENT	EOP
SPOT ELEVATION	100x0
FENCE	
TREE	
SIGN	
BOLLARD	• B
ROOF LEADER	RL
HANDICAP PARKING	
# OF PARKING STALLS	10
TOP OF WALL	TW
BOTTOM OF WALL	BW
TOP OF CURB	TC
BOTTOM OF CURB	BC
SOIL BORING LOCATION	B-3
TREE DRIP LINE (RADIAL)	30'DL

ZONING:

ZONING DISTRICT: S-15
MIN. LOT SIZE: 20,000 S.F.
MIN. LOT FRONTAGE: 120 FEET
MIN. BUILDING SETBACKS:
FRONT: 20 FEET
SIDE: 15 FEET
REAR: 20 FEET

64 MIDDLESEX AVENUE

EXISTING CONDITIONS PLAN OF LAND
LOCATED IN
READING, MASSACHUSETTS
(MIDDLESEX COUNTY)

PREPARED FOR
TOWN OF READING

SCALE: 1"= 20' DATE: JAN. 28 2014

PREPARED BY
SULLIVAN ENGINEERING GROUP, LLC
22 MOUNT VERNON ROAD
BOXFORD, MA 01921
(978) 352-7871

SHEET No. 1 OF 1

DEMOLITION LEGEND:

- BITUMINOUS CONCRETE TO BE REMOVED/PULVERIZED
- EXISTING SEGMENTAL WALL TO BE SALVAGED
- CEMENT CONCRETE TO BE REMOVED
- CURBING TO BE REMOVED AND SALVAGED
- FENCE REMOVAL
- UTILITIES LINE TO BE REMOVED/ABANDONED (COORDINATE WITH MEP)
- LIMIT OF WORK
- SOIL EROSION
- UTILITIES STRUCTURE TO BE REMOVED
- UTILITIES STRUCTURE TO BE ABANDONED
- SIGNS TO BE REMOVED
- TREE TO BE REMOVED
- PROPOSED CATCHBASIN FILTER
- TREE PROTECTION
- TREE TO BE RELOCATED

NOTES:

1. THE CONTRACTOR SHALL PHASE ALL DEMOLITION AND REMOVAL WORK TO ALLOW FOR THE CONTINUING OPERATION OF ALL STRUCTURES.
2. DRAWING DOES NOT SHOW ENTIRE SCOPE OF DEMO. IT IS INTENDED TO AID CONTRACTOR WITH IDENTIFYING WORK AND IS NOT ALL INCLUSIVE. CONTRACTOR SHOULD REFER TO OTHER DRAWINGS FOR COORDINATION.

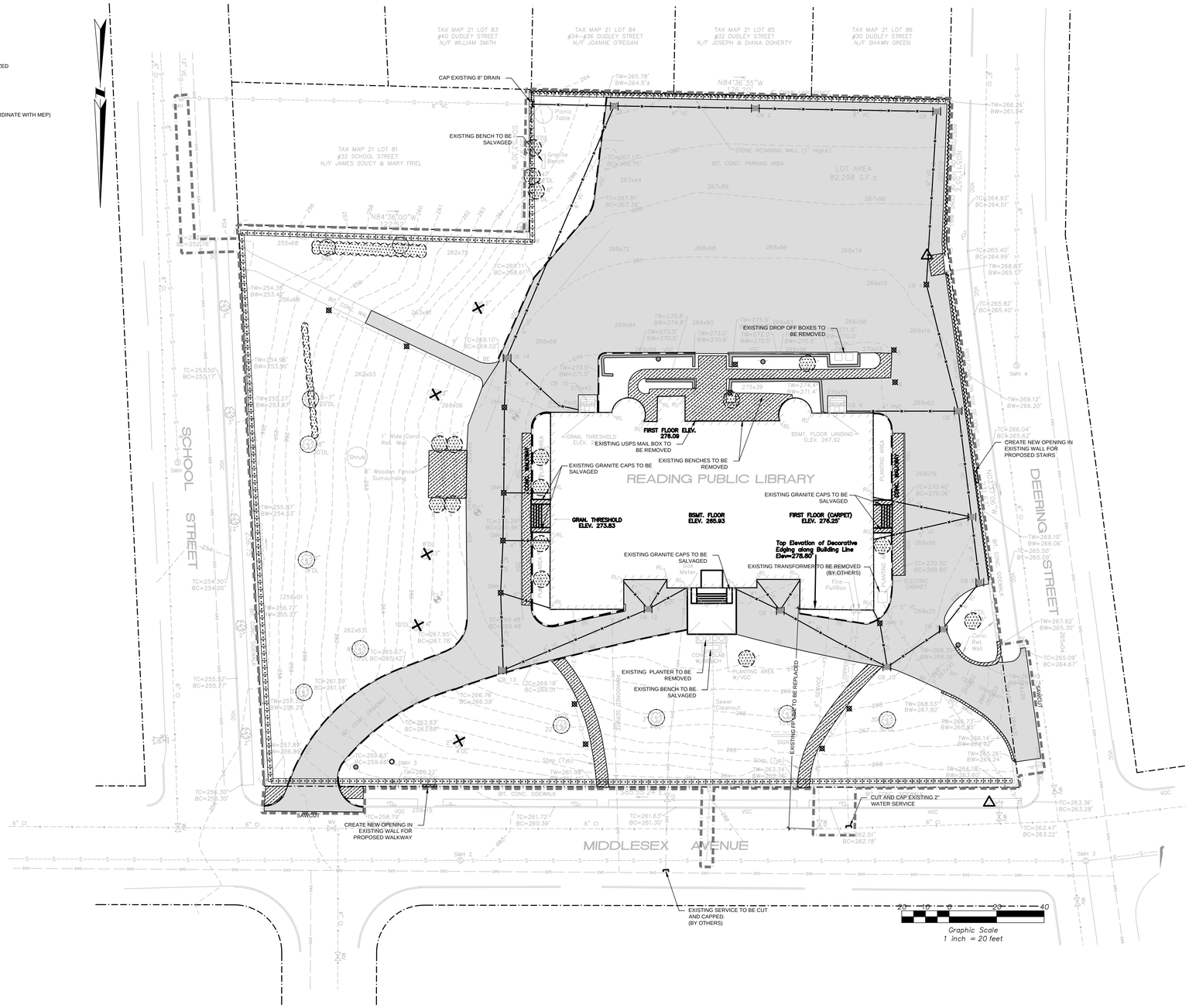

REVISIONS

#	DATE	DESCRIPTION

READING PUBLIC LIBRARY

PROJECT SUB-TITLE CITY, STATE

samiotes

Samiotes Consultants Inc.
Civil Engineers • Land Surveyors

20 A Street
Framingham, MA 01701

T 508.877.6688
F 508.877.8349

www.samiotes.com

COMMONWEALTH OF MASSACHUSETTS
ANDREW M. TRUMAN
No. 45505
CIVIL
PROFESSIONAL ENGINEER

SITE DEMOLITION & REMOVAL PLAN

SCALE	PROJECT #	DATE ISSUED
AS SHOWN	12345.00	04.23.14

D100

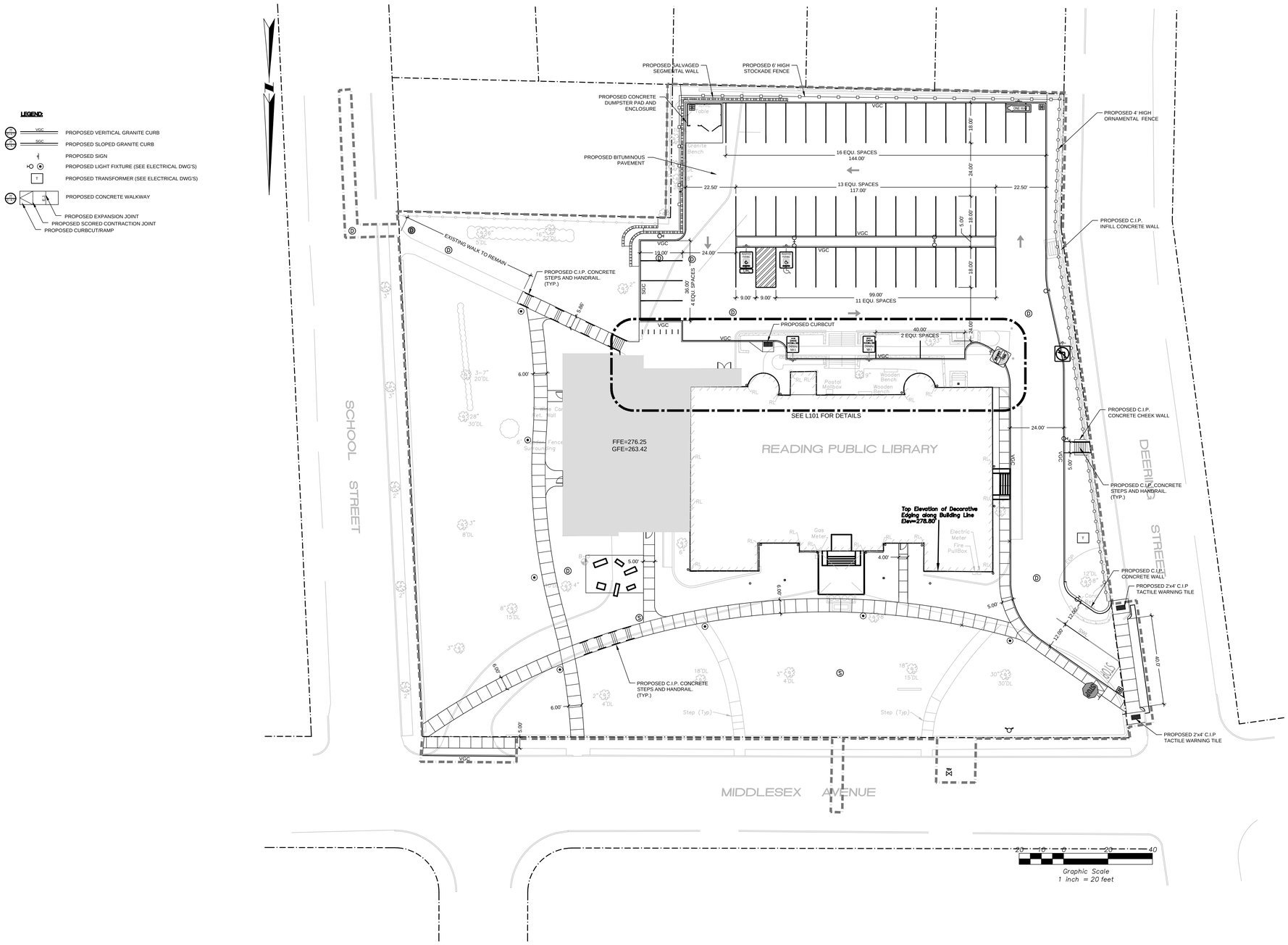

REVISIONS

#	DATE	DESCRIPTION

READING PUBLIC LIBRARY

PROJECT SUB-TITLE CITY, STATE

samiotes

Samiotes Consultants Inc.
Civil Engineers • Land Surveyors

20 A Street
Framingham, MA 01701

T 508.877.6688
F 508.877.8349

www.samiotes.com

COMMONWEALTH OF MASSACHUSETTS
ANDREW M. TRUMAN
No. 45505
CIVIL
PROFESSIONAL ENGINEER

LAYOUT AND MATERIALS PLAN

SCALE	PROJECT #	DATE ISSUED
AS SHOWN	12345.00	04.23.14

C100

LEGEND:

D	PROPOSED STORM DRAINAGE LINE
RD	PROPOSED ROOF DRAIN LINE
FP	PROPOSED FIRE PROTECTION LINE
W	PROPOSED DOMESTIC WATER SERVICE
G	PROPOSED GAS LINE (BY OTHERS)
E	PROPOSED UNDERGROUND ELECTRIC LINE
SMH	PROPOSED SANITARY SEWER MANHOLE
DMH	PROPOSED STORM DRAINAGE MANHOLE
WQU	PROPOSED WATER QUALITY UNIT
CB	PROPOSED CATCH BASIN
AD	PROPOSED AREA DRAIN
FD	PROPOSED FLOOR DRAIN
DS	PROPOSED DOWNSPOUT
CO	PROPOSED CLEANOUT
	PROPOSED GAS GATE VALVE
	PROPOSED WATER GATE VALVE
	PROPOSED TAP AND SLEEVE VALVE
	PROPOSED LIGHT FIXTURE (SEE ELECTRICAL DWG'S)
T	PROPOSED TRANSFORMER (SEE ELECTRICAL DWG'S)

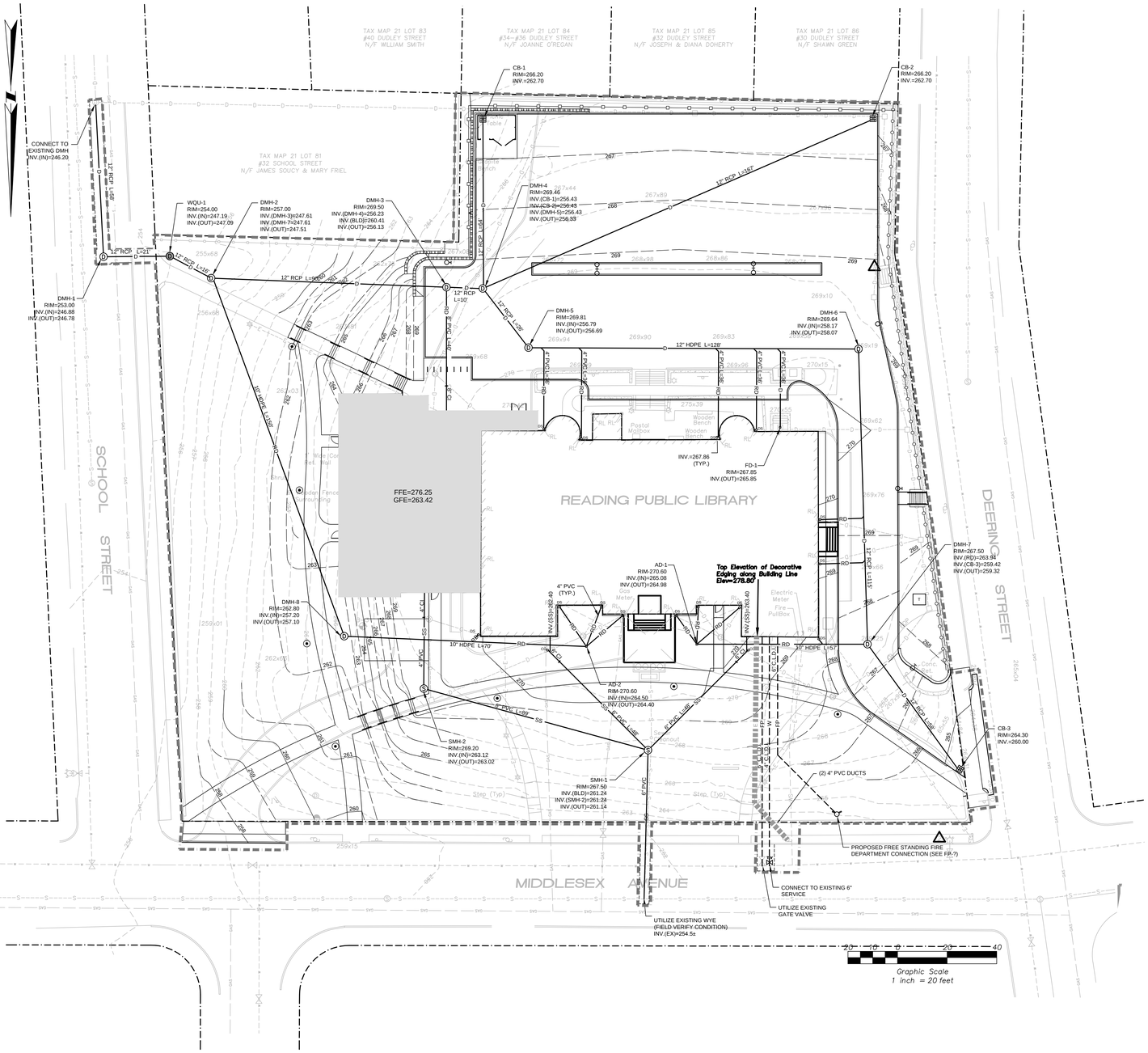

REVISIONS

#	DATE	DESCRIPTION

READING PUBLIC LIBRARY

PROJECT SUB-TITLE CITY, STATE

samiotes

Samiotes Consultants Inc.
Civil Engineers • Land Surveyors

20 A Street
Framingham, MA 01701

T 508.877.6688
F 508.877.8349

www.samiotes.com

COMMONWEALTH OF MASSACHUSETTS
ANDREW M. TRUMAN
No. 45505
CIVIL
REGISTERED PROFESSIONAL ENGINEER

Drainage, Utility and Grading Plan

SCALE	PROJECT #	DATE ISSUED
AS SHOWN	12345.00	04.23.14

C200

LEGEND:

129	PROPOSED INTERMEDIATE CONTOUR
130	PROPOSED INDEX CONTOUR
130.0 +	PROPOSED SPOT GRADE
(130.0) +	EXISTING GRADE TO REMAIN
TW=131.87 BW=130.50 *	PROPOSED TOP/BOTTOM OF WALL (NOT FOUNDATION)
TC=131.87 BC=130.50 *	PROPOSED TOP/BOTTOM OF CURB
TS=131.87 BS=130.50 *	PROPOSED TOP/BOTTOM OF STEP
RIM=130.20 +	PROPOSED RIM ELEVATION

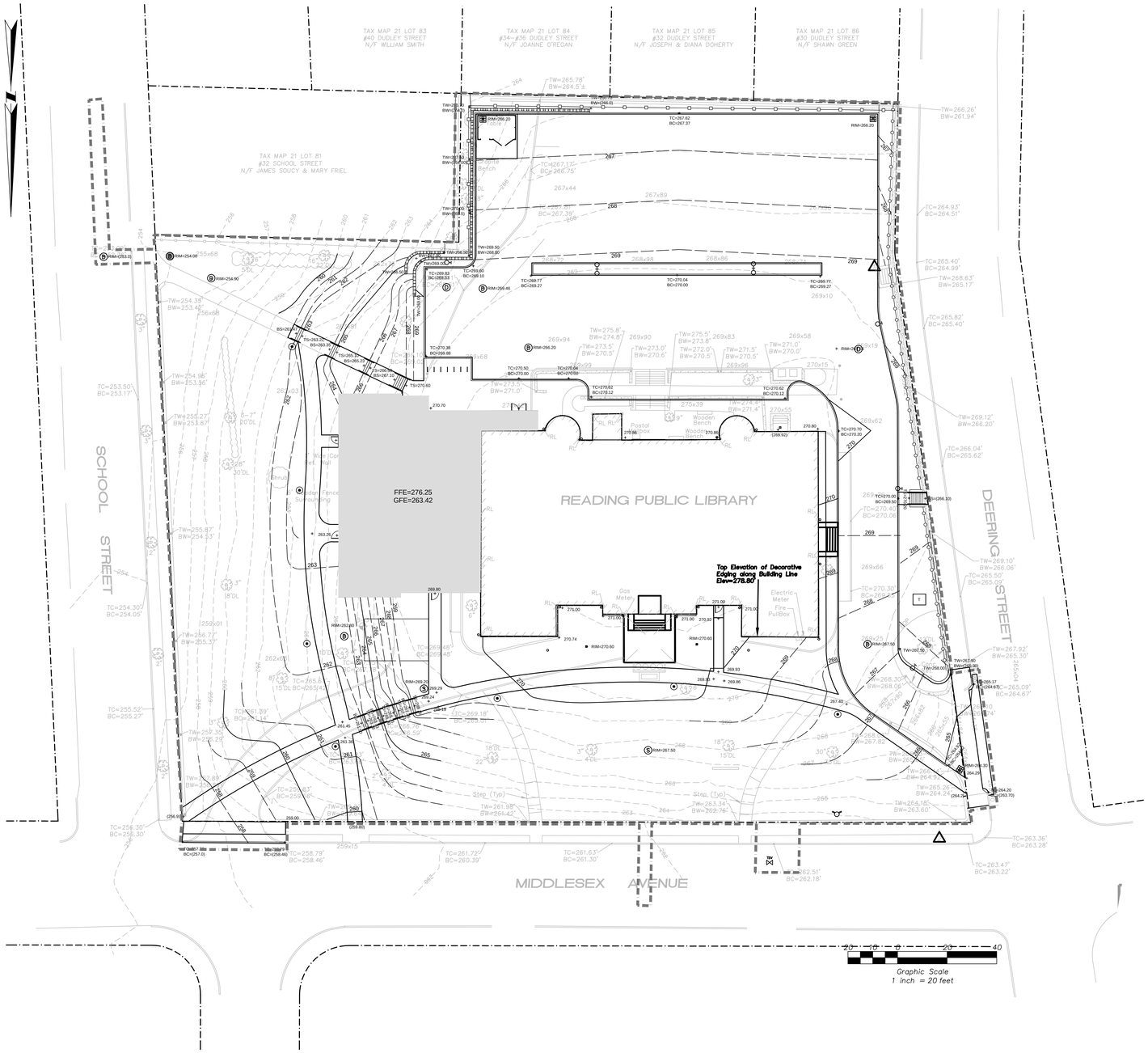

REVISIONS

#	DATE	DESCRIPTION

READING PUBLIC LIBRARY

PROJECT SUB-TITLE CITY, STATE

samiotes

Samiotes Consultants Inc.
Civil Engineers + Land Surveyors

20 A Street
Framingham, MA 01701

T 508.877.6688
F 508.877.8349

www.samiotes.com

COMMONWEALTH OF MASSACHUSETTS
ANDREW M. TRUMAN
No. 45505
CIVIL
REGISTERED PROFESSIONAL ENGINEER

Grading Plan

SCALE	PROJECT #	DATE ISSUED
AS SHOWN	12345.00	04.23.14

C300

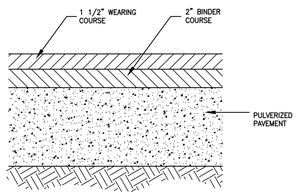

1 BITUMINOUS PAVEMENT

NTS

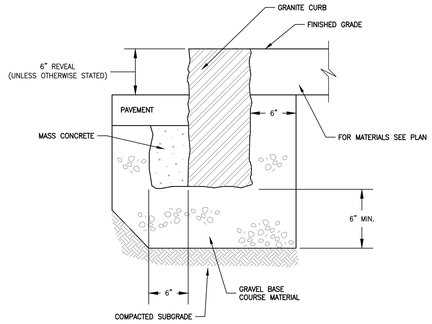

2 VERTICAL GRANITE CURB

NTS

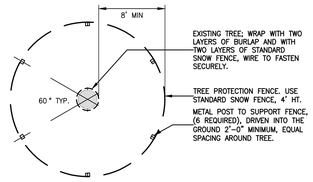

3 EXISTING TREE PROTECTION

SCALE: NTS

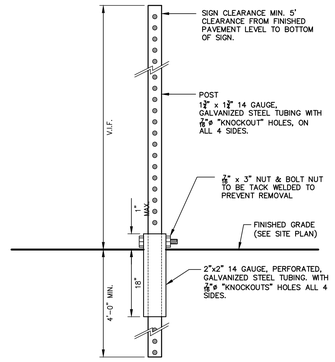

4 TELESCOPING-BREAKAWAY TRAFFIC SIGN POST

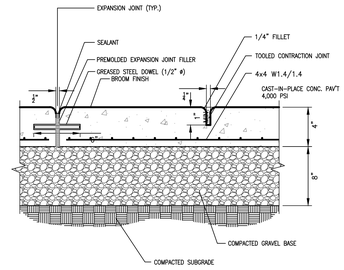

5 BROOM FINISH CONCRETE WALKWAY

NTS

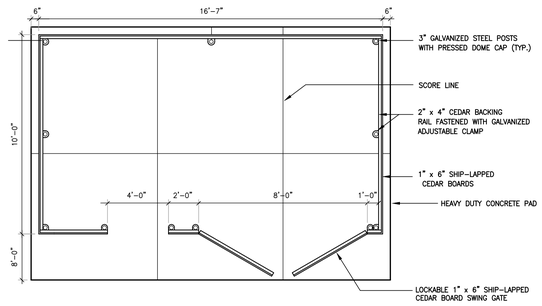

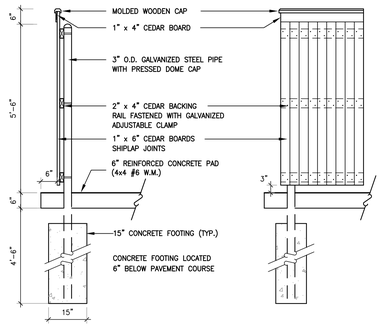

6 DUMPSTER ENCLOSURE PLAN & ENCLOSURE

NTS

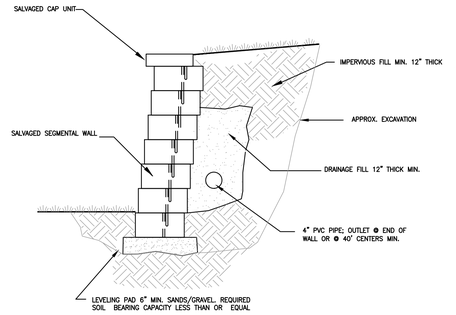

7 MODULAR (UNREINFORCED) CONCRETE UNIT RETAINING WALL

NTS

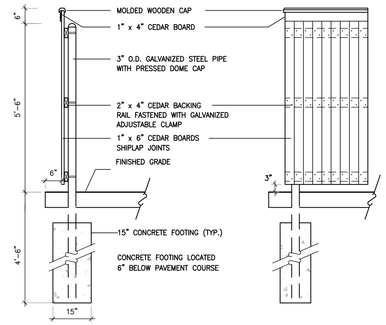

8 WOOD STOCKAGE FENCE

NTS

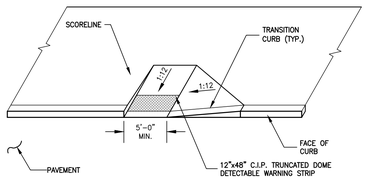

NOTES:

1. DIMENSIONS SHOWN AT EDGE OF ROAD ARE FIXED.
2. RAMP CROSS SECTION TO BE SAME AS ADJ. SIDEWALK; I.E.: DEPTH OF SURFACE AND FOUNDATION.
3. NO RAMPS TO BE PLACED BEHIND STOP LINE.
4. DIMENSIONS ARE SUBJECT TO CHANGE IN FIELD. ALL SLOPES AND DIMENSIONS TO COMPLY W/ ADA REQUIREMENTS.

9 CURB CUT AND RAMP

NTS

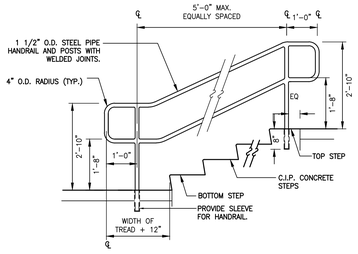

10 HANDRAIL

NTS

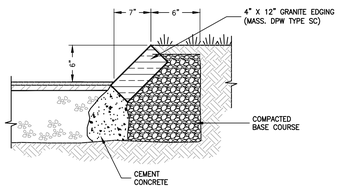

11 SLOPED GRANITE CURBING

NTS

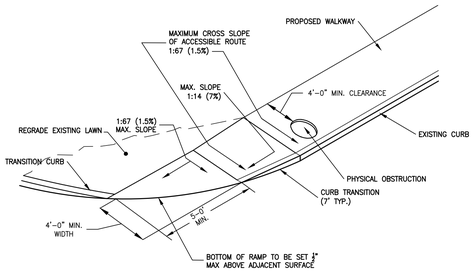

12 CURB CUT

NTS

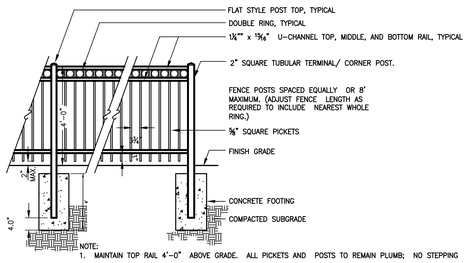

NOTE:

1. MAINTAIN TOP RAIL 4'-0" ABOVE GRADE. ALL PICKETS AND POSTS TO REMAIN PLUMB; NO STEPPING

13 ALUMINIUM ORNIMENTAL FENCE

NTS

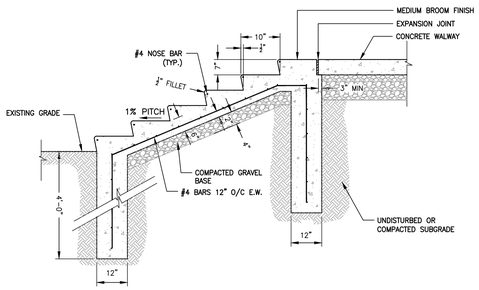

14 REINFORCED CAST-IN-PLACE CONCRETE STAIRS

NTS

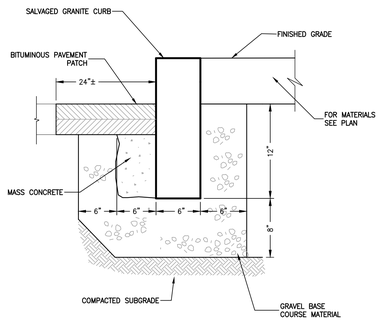

15 SALVAGED GRANITE CURB INSTALLATION

NTS

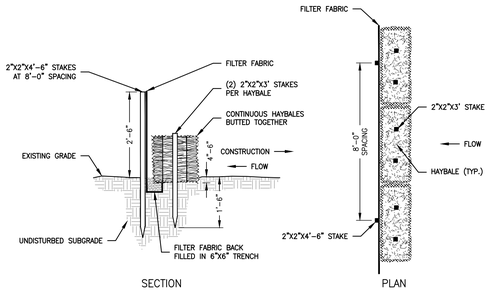

2 SILT FENCE WITH HAYBALES

NTS

REVISIONS

#	DATE	DESCRIPTION

READING PUBLIC LIBRARY

PROJECT SUB-TITLE CITY, STATE

samiotes

Samiotes Consultants Inc.
Civil Engineers • Land Surveyors

20 A Street
Framingham, MA 01701

T 508.877.6688
F 508.877.8349

www.samiotes.com

COMMONWEALTH OF MASSACHUSETTS ANDREW M. TRUMAN No. 45505 CIVIL REGISTERED PROFESSIONAL ENGINEER

Site Details

SCALE	PROJECT #	DATE ISSUED
AS SHOWN	12345.00	04.23.14

C400

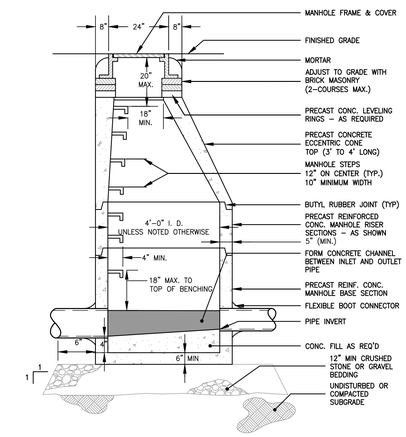

1 PRECAST STORM DRAIN MANHOLE

NTS

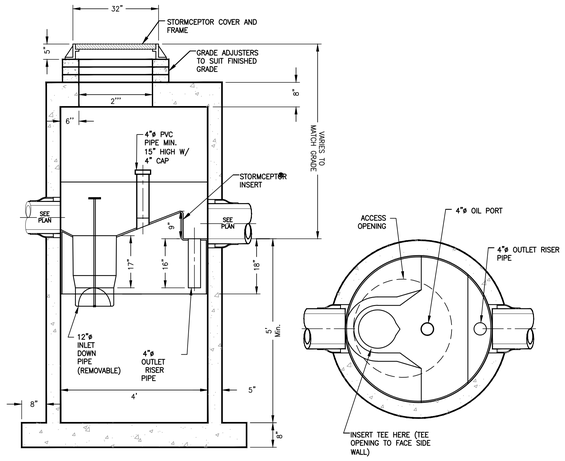

SECTION THRU CHAMBER

PLAN VIEW

2 WATER QUALITY UNIT

NTS

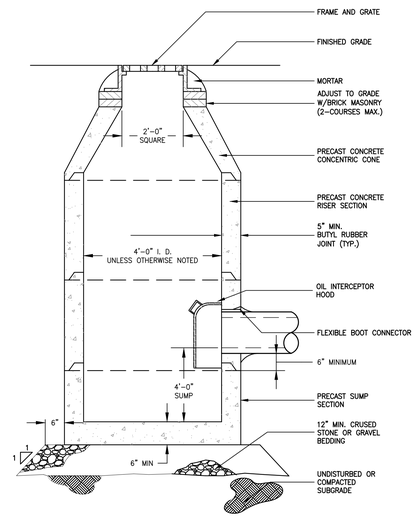

3 CATCH BASIN

NTS

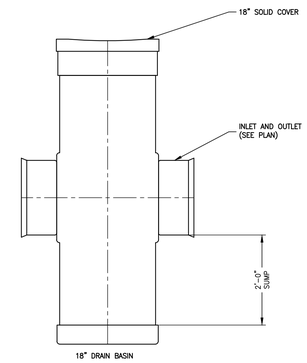

4 'NYLOPLAST' AREA DRAIN

NTS

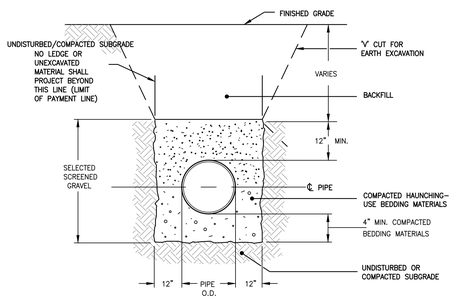

5 TRENCH SECTION- PVC GRAVITY PIPE

NTS

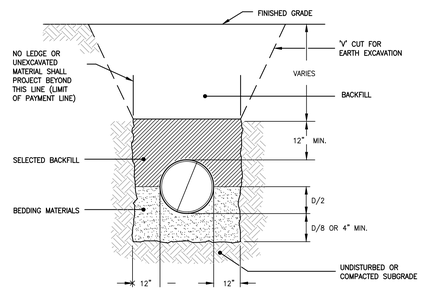

6 TRENCH SECTION - C.I GRAVITY PIPE

NTS

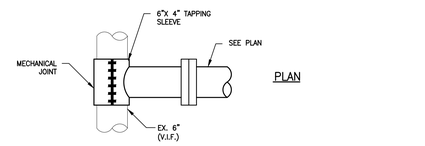

PLAN

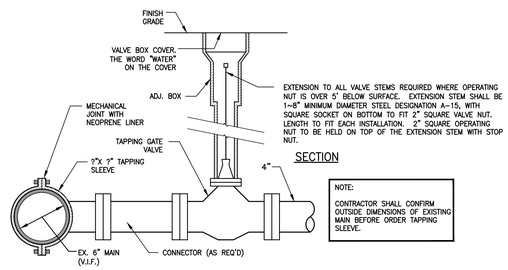

SECTION

NOTE:

CONTRACTOR SHALL CONFIRM OUTSIDE DIMENSIONS OF EXISTING MAIN BEFORE ORDER TAPPING SLEEVE.

7 TAPPING SLEEVE, VALVE & BOX DETAIL

NTS

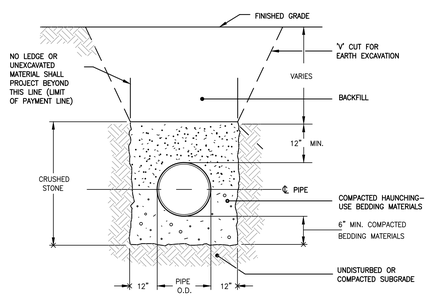

8 TRENCH SECTION- RCP PIPE

NTS

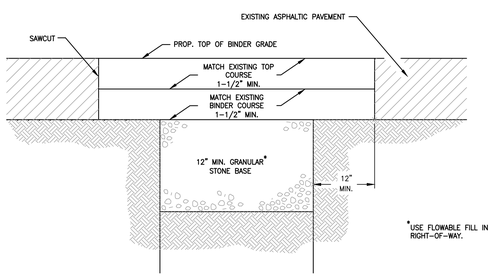

9 TRENCH PATCHING DETAIL

NTS

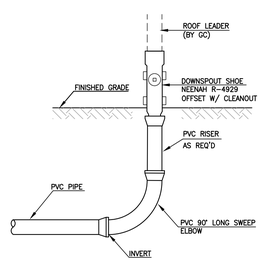

10 ROOF LEADER

NTS

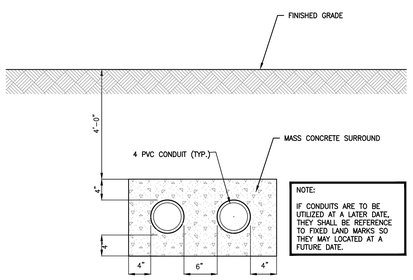

NOTE:

IF CONDUITS ARE TO BE UTILIZED AT A LATER DATE, THEY SHALL BE REFERENCE TO FIXED LAND MARKS SO THEY MAY LOCATED AT A FUTURE DATE.

11 PVC CONDUIT

NTS

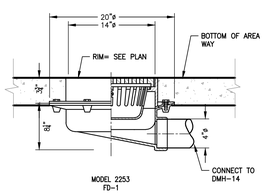

12 AREAWAY FLOOR DRAIN

NTS

REVISIONS

#	DATE	DESCRIPTION

READING PUBLIC LIBRARY

PROJECT SUB-TITLE CITY, STATE

samiotes

Samiotes Consultants Inc.
Civil Engineers • Land Surveyors

20 A Street
Framingham, MA 01701

T 508.877.6688
F 508.877.8349

www.samiotes.com

COMMONWEALTH OF MASSACHUSETTS ANDREW M. TRUMAN No. 45505 CIVIL REGISTERED PROFESSIONAL ENGINEER

Site Details

SCALE	PROJECT #	DATE ISSUED
AS SHOWN	12345.00	04.23.14

C401

LEGEND:

- VGC — PROPOSED VERITICAL GRANITE CURB
- SGC — PROPOSED SLOPED GRANITE CURB
- PROPOSED SIGN
- PROPOSED LIGHT FIXTURE (SEE ELECTRICAL DWG'S)
- T — PROPOSED TRANSFORMER (SEE ELECTRICAL DWG'S)
- PROPOSED CONCRETE WALKWAY
  - PROPOSED EXPANSION JOINT
  - PROPOSED SCORED CONTRACTION JOINT
  - PROPOSED CURBCUT/RAMP

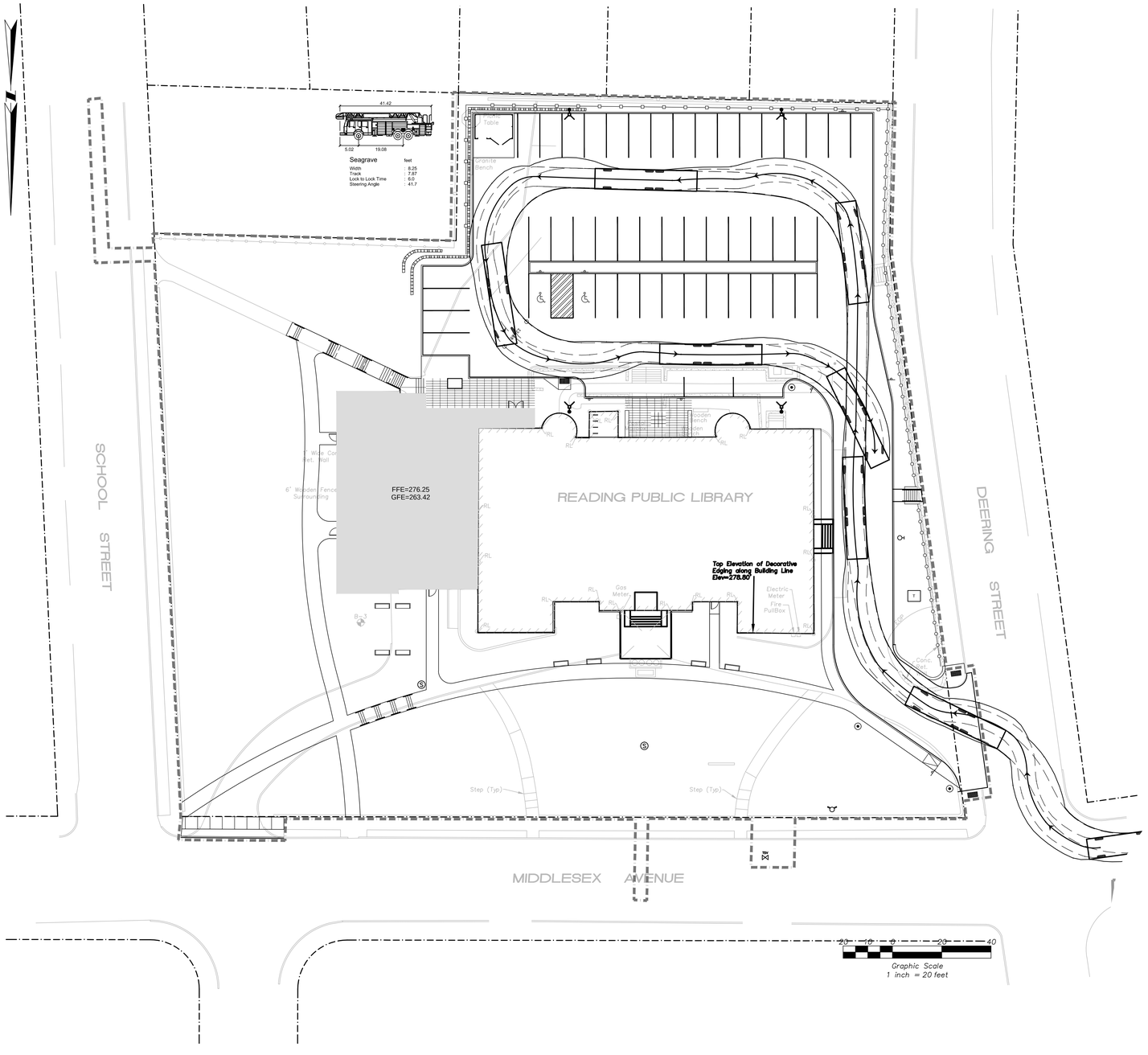

-15
)0 S.F.
120 FEET
'KS:

REVISIONS

#	DATE	DESCRIPTION

READING PUBLIC LIBRARY

PROJECT SUB-TITLE CITY, STATE

samiotes

Samiotes Consultants Inc.
Civil Engineers • Land Surveyors

20 A Street
Framingham, MA 01701

T 508.877.6688
F 508.877.8349

www.samiotes.com

FIRE TRUCK MOVEMENT PLAN

SCALE	PROJECT #	DATE ISSUED
AS SHOWN	12345.00	04.23.14

C500

NOTE:
EXISTING PERENNIAL AND SHRUBS
TO BE RELOCATED BY GARDEN CLUB

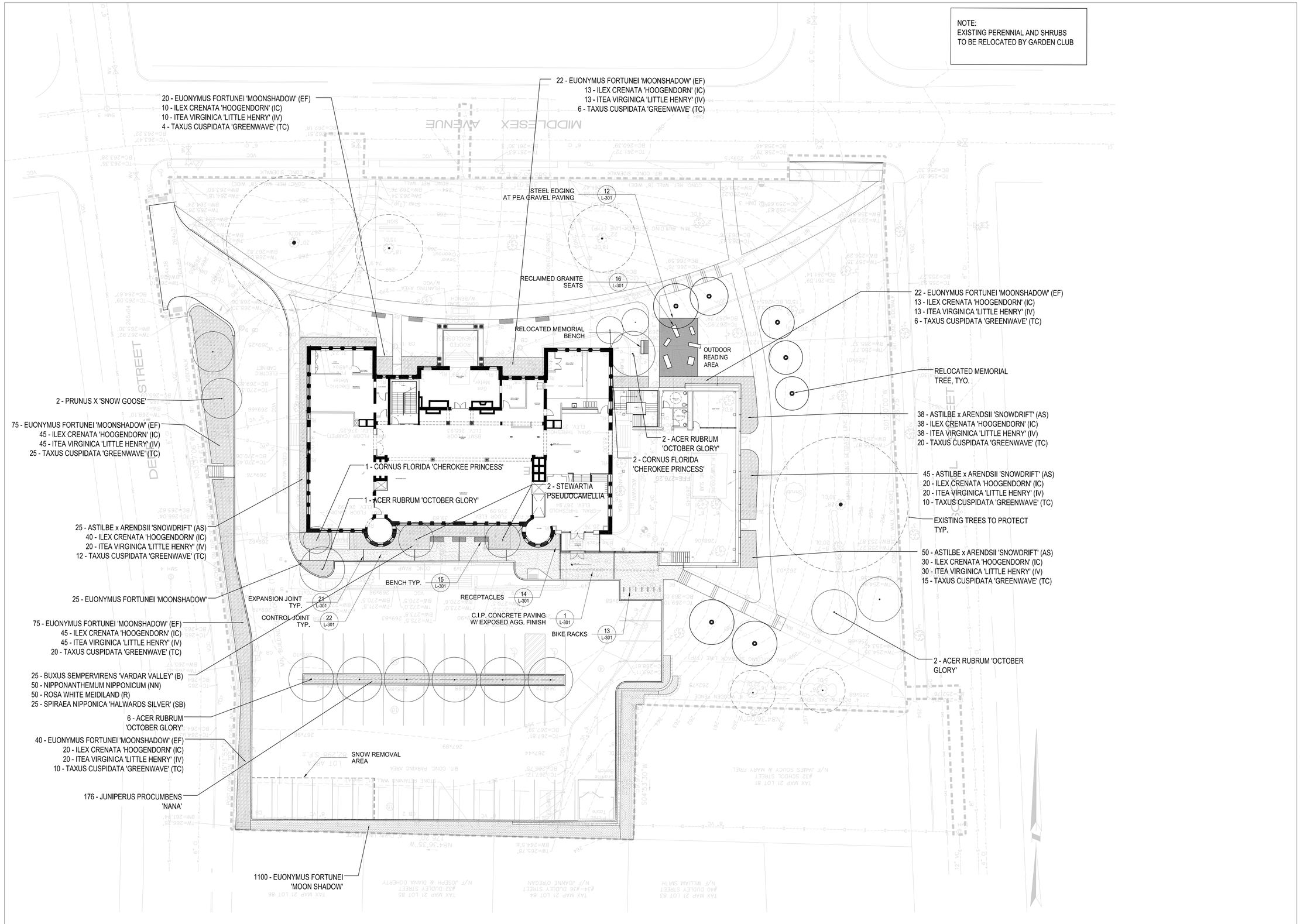

REVISIONS

READING PUBLIC LIBRARY

64 MIDDLESEX AVE, READING, MA

cbt
617 262 4354 cbtarchitects.com
110 canal street boston, ma 02114

PROJECT CONSULTANT:

Ground Inc.
6 Carlton Street, Somerville, MA 02143
617.718.0889 www.groundinc.com
ground

© 2013

LANDSCAPE PLAN

SCALE	PROJECT #	DATE ISSUED
1/16" =1'-0"	00000.00	04.23.14

L-101

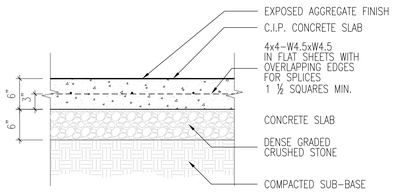

01 C.I.P. CONCRETE

SCALE: 1" = 1'-0"

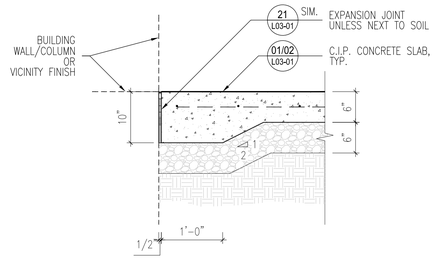

03 C.I.P. CONCRETE PAVING AT EDGE

SCALE: 1" = 1'-0"

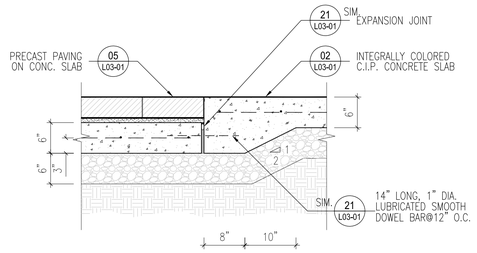

06 C.I.P. CONCRETE PAVING AT PRECAST PAVER

SCALE: 1" = 1'-0"

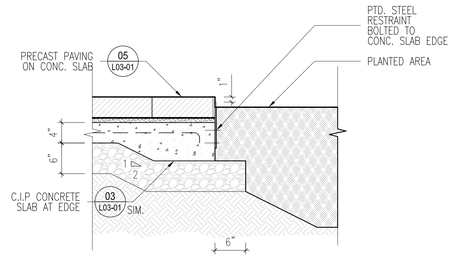

08 PRECAST PAVER EDGE AT PLANTED BED

SCALE: 1" = 1'-0"

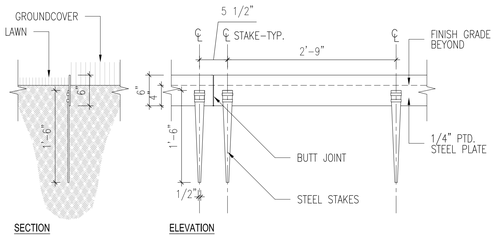

11 STEEL EDGING

SCALE: 1" = 1'-0"

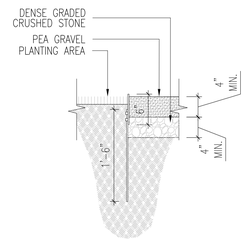

12 STEEL EDGING AT PEA GRAVEL

SCALE: 1" = 1'-0"

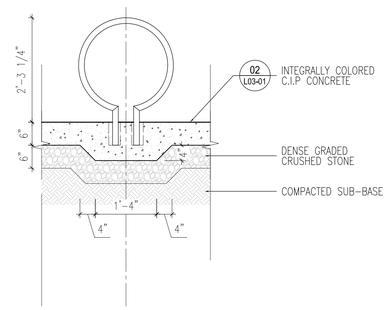

13 BICYCLE RACK

SCALE: 3/4" = 1'-0"

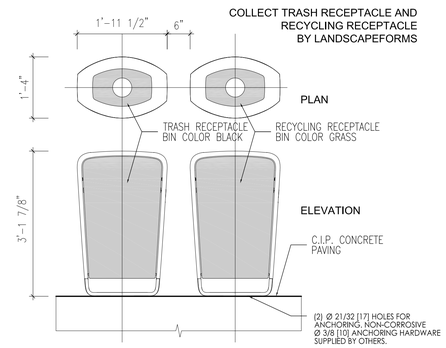

14 TRASH RECEPTACLE

SCALE: 3/4" = 1'-0"

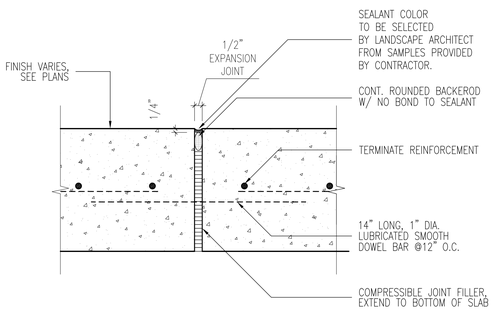

21 EXPANSION JOINT

SCALE: 3" = 1'-0"

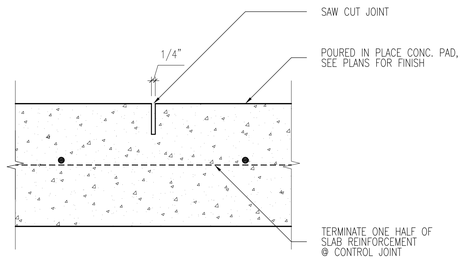

22 CONTROL JOINT

SCALE: 3" = 1'-0"

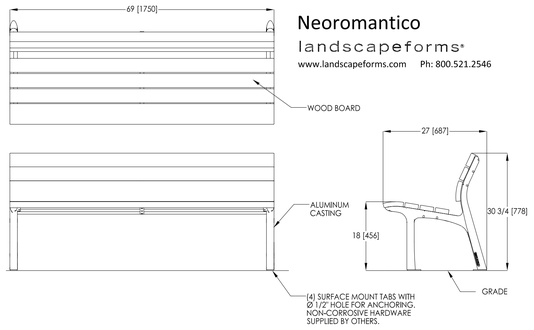

15 BENCH

SCALE: 3/4" = 1'-0"

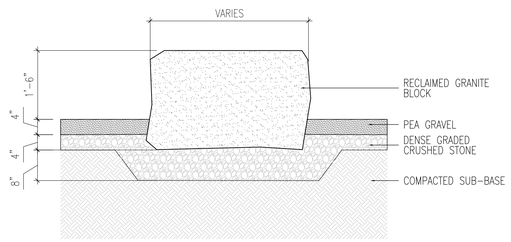

16 GRANITE SEAT BLOCK

SCALE: 1" = 1'-0"

REVISIONS

READING PUBLIC LIBRARY

64 MIDDLESEX AVE, READING, MA

cbt 617 262 4354 cbtarchitects.com
110 canal street boston, ma 02114

PROJECT CONSULTANT:

Ground Inc.
6 Carlton Street, Somerville, MA 02143
617.718.0889 www.groundinc.com
ground
© 2013

LANDSCAPE DETAILS

SCALE	PROJECT #	DATE ISSUED
SEE DETAILS	00000.00	04.23.14

L-301

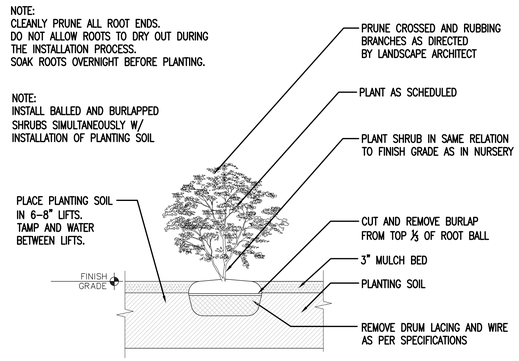

01 SHRUB PLANTING - B&B

SCALE: 3/4" = 1'-0"

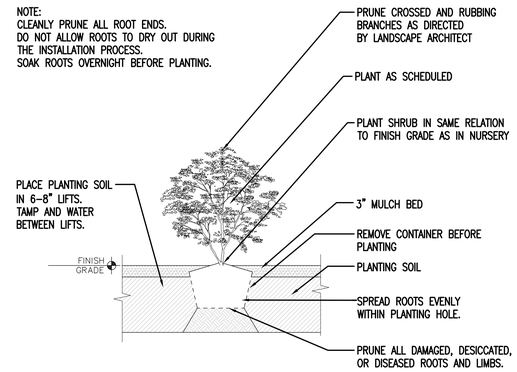

02 SHRUB/PERENNIAL - CONTAINER

SCALE: 3/4" = 1'-0"

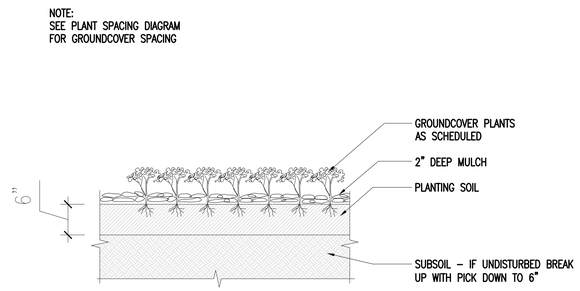

03 GROUNDCOVER PLANTING

SCALE: 1" = 1'-0"

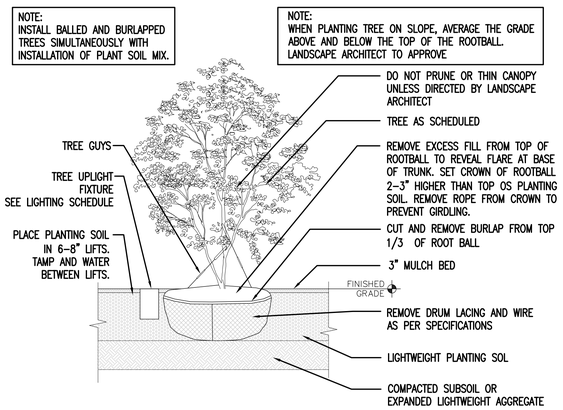

04 TREE PLANTING

SCALE: 3/8" = 1'-0"

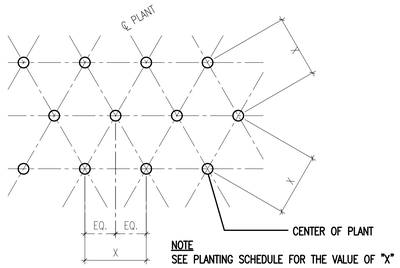

05 PLANT SPACING DIAGRAM - PLAN

SCALE: N.T.S.

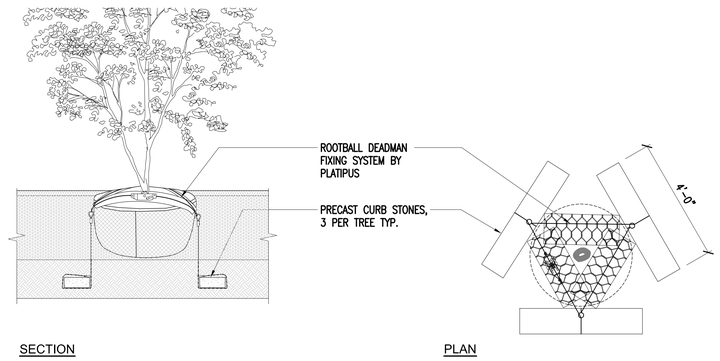

06 TREE ANCHORING SYSTEM

SCALE: 1/2" = 1'-0"

PLANTING SCHEDULE

QTY.	UNIT		BOTANICAL NAME	COMMON NAME	SIZE/CALIPER	HEIGHT	ROOT	SPACING O.C.	SEASON	COLOR
			TREES							
3	EA.		CORNUS FLORIDA 'CHEROKEE PRINCESS'	DOGWOOD 'CHEROKEE PRINCESS'	3-3.5"		B&B	AS SHOWN		WHITE
12	EA.		ACER RUBRUM 'OCTOBER GLORY'	OCTOBER GLORY RED MAPLE	4-4.5"		B&B	AS SHOWN		WHITE
2	EA.		PRUNUS X 'SNOW GOOSE'	SNOW GOOSE CHERRY	3-3.5"		B&B	AS SHOWN		
2	EA.		STEWARTIA PSEUDOCAMELLIA	JAPANESE STEWARTIA	4-4.5"		B&B	AS SHOWN		PINK
			SHRUBS							
25	EA		BUXUS SEMPERVIRENS 'VARDAR VALLEY'	BOXWOOD	7 GAL		CONT.	26"	SPRING	
274	EA		ILEX CRENATA 'HOOGENDORN'	JAPANESE HOLLY			CONT.	30"		
274	EA.		ITEA VIRGINICA 'LITTLE HENRY'	SWEETSPIRE 'LITTLE HENRY'	3 GAL		CONT.	30"		ORANGE
50	EA		ROSA WHITE MEIDILAND	WHITE MEIDILAND ROSE	3 GAL		CONT.	22"	SUMMER/FALL	
25	EA.		SPIRAEA NIPPONICA 'HALWARDS SILVER'	HALWARDS SILVER SPIREA	5 GAL		CONT.	30"	SUMMER	
118	EA.		TAXUS CUSPIDATA 'GREENWAVE'	YEW 'GREENWAVE'	2-2.5'		CONT.	42"		WHITE
										WHITE
			PERENNIALS							
133	EA		ASTILBE X ARENDSII 'SNOWDRIFT'	ASTILBE 'SNOWDRIFT'	2 GAL	26"	CONT.	24"	EARLY/MID SUMMER	
50	EA		NIPPONANTHEMUM NIPPONICUM	MONTAUK DAISY		24"	CONT.	22"		
										WHITE
										WHITE
			GROUNDCOVER							
528	EA		JUNIPERUS PROCUMBENS 'NANA'	JAPANESE GARDEN JUNIPER			CONT.	18"		
1,100	EA		EUONYMUS FORTUNEI 'MOONSHADOW'	WINTER CREEPER	TRAY/100			1'-0" O.C.		
										GREEN

REVISIONS

READING PUBLIC LIBRARY

64 MIDDLESEX AVE, READING, MA

cbt 617 262 4354 cbtarchitects.com
110 canal street boston, ma 02114

PROJECT CONSULTANT:

Ground Inc.
6 Carlton Street, Somerville, MA 02143
617.718.0889 www.groundinc.com
ground
© 2013

PLANTING DETAILS

SCALE	PROJECT #	DATE ISSUED
SEE DETAILS	00000.00	04.23.14

L-304

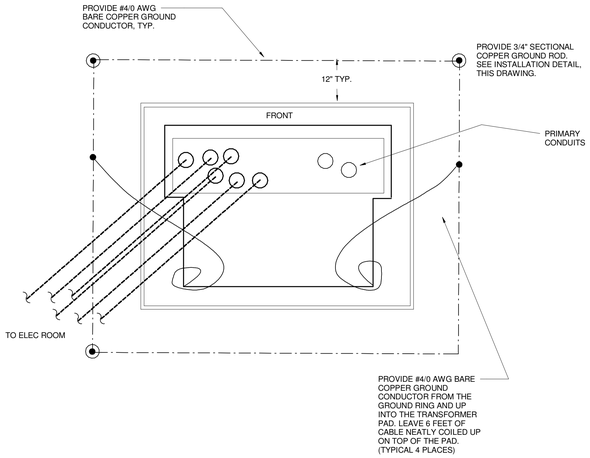

TRANSFORMER GROUNDING DETAILS

DRAWING NOTES

4 TRANSFORMER PAD SHALL BE PROPERLY SIZED IN ACCORDANCE WITH THE EQUIPMENT PURCHASED, AND AS RECOMMENDED BY THE EQUIPMENT MANUFACTURER.

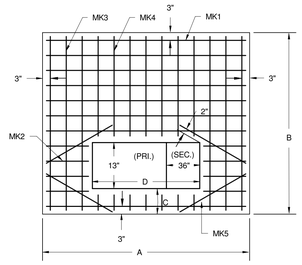

PAD TYPE	3-PHASE TRANSF. KVA	DIMENSIONS IN INCHES *					REINFORCING BARS				
		A	B	C	D	E	MK1	MK2	MK3	MK4	MK5
#1	500 - 3 PHASE	97	61	9	68	12	7#4 91"	6#4 10"	4#4 57"	12#4 35"	4#4 18"

* COORDINATE EXACT SIZE OF PAD REQUIRED WITH ACTUAL EQUIPMENT BEING FURNISHED BY THE OWNER.

NOTES:

1. CONCRETE TESTING, 4000 PSI, 4% TO 6% ENTRAINED AIR, 1/2" MAXIMUM SIZE AGGREGATE.

2. REINFORCING STEEL ATSM-A615 GRADE 60, PLACE APPROX. 6" O.C. EACH WAY AND SECURELY TIED TOGETHER.

3. MINIMUM CONCRETE COVER OVER REINFORCING STEEL 2 INCHES UNLESS NOTED.

4. WOOD FLOAT FINISH, LEAVING NO DEPRESSIONS.

1 TRANSFORMER PAD (250-1500KVA) & GROUNDING DETAIL
1/8" = 1'-0"

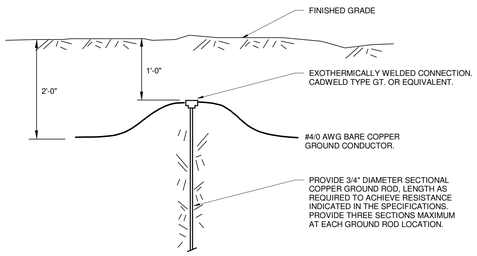

3 TYPICAL GROUNDING ROD INSTALLATION
1/8" = 1'-0"

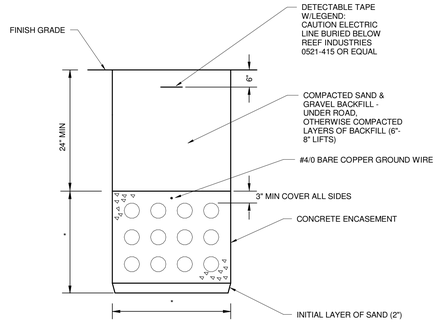

* VARIES, SEE CONDUIT DUCT BANK SECTIONS

SECTION A
NOT TO SCALE

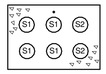

SECTION B
NOT TO SCALE

TYPICAL SITE LIGHTING C

TRENCHING NOTES

1 CONTRACTOR SHALL USE EXTREME CAUTION WHEN TRENCHING. DIGGING TEST PITS IS REQUIRED AT EVERY UTILITY CROSSING. THE MOST CRITICAL AREAS ARE INDICATED ON THE DRAWINGS. FAILURE TO PERFORM TEST PITS MAY RESULT IN UNNECESSARY DELAYS AND CONFLICTS FOR WHICH THE CONTRACTOR MAY BE HELD RESPONSIBLE.

2 TEST PITS SHALL BE COORDINATED WITH THE ENGINEER, AND ALL SHALL INCLUDE INFORMATION AS TO SIZE AND CONFIGURATION OF PIPES FOUND AS WELL AS INVERT ELEVATIONS.

3 TRENCH BOTTOM SHALL BE UNDISTURBED, FIRM, AND UNIFORM FOR ITS ENTIRE LENGTH.

4 KEEP THE TRENCH WIDTH AS NARROW AS POSSIBLE TO AVOID ERECTING FORMS FOR CONCRETE.

5 PLACE 2" LAYER OF SAND IN BOTTOM OF TRENCH AS BASE FOR CONCRETE PLACEMENT.

6 WHEN FINAL BACKFILLING IS PERFORMED, UTILIZE EXCAVATED MATERIAL. REMOVE ALL LARGE ROCKS, FOREIGN MATERIALS, ETC. TO AVOID DAMAGE TO CONDUITS.

7 ALL UNDERGROUND CONDUITS SHALL BE 4" RIGID PVC SCHEDULE 40, ENCASED IN CONCRETE, UNLESS OTHERWISE INDICATED ON DRAWINGS.

8 SEAL ALL CONDUIT JOINTS AND ALL AROUND EACH CONDUIT AT ALL WALL PENETRATIONS.

9 ALL DUCTS SHALL BE CAPPED DURING CONCRETE POURING AND LEFT CAPPED UNTIL CABLE PULLING BEGINS.

10 ALL CONDUIT SHALL BE SLOPED @ 3"/100' MINIMUM TO DRAIN.

11 INDICATED DIMENSIONS FOR THE SPACING OF CONDUIT IN THE DUCT BANKS ARE MINIMUMS. RIGID PLASTIC SPACERS AT INTERVALS OF 10'-0" OR LESS ARE RECOMMENDED FOR DUCT BANKS ENCASED IN CONCRETE.

CONDUIT SPACING WHEN USING SPACERS

CONDUIT SIZE	CONDUIT SIZE O.D.	STANDARD CONDUIT SEPARATIONS
		CENTERLINE TO CENTERLINE
4"	4 5/8"	HOR. 6 1/4"
		VERT. 6"
		* E.O.C. 6 1/8"

* DENOTES CENTERLINE OF CONDUIT TO EDGE OF CONCRETE

CONDUIT SCHEDULE

CONDUIT	SIZE	CABLE SIZE	CONDUIT USE DESCRIPTION
P1	5"	3-1/C 500KCMIL (5KV)	5KV PRIMARY FEEDER
P2	5"	----------	FUTURE 5KV PRIMARY FEEDER
S1	4"	SEE ONE-LINE	SECONDARY SERVICE TO LIBRARY
S2	4"	----------	SECONDARY SPARE
L1	1'	2#10&1#10G	SITE LIGHTING
L2	1/2"	2#10-&1#10G	SITE LIGHTING

DRAWING NOTES

1 THE FOLLOWING NOTES ONLY APPLY TO THIS DRAWING.

2 REFER TO GENERAL NOTES, ELECTRICAL TRADE NOTES, LEGEND AND ABBREVIATIONS ON DRAWING E-000.

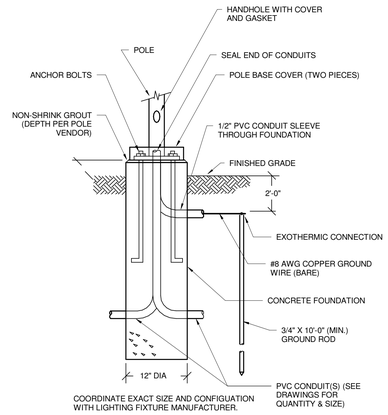

4 LIGHT POLE DETAIL
1/8" = 1'-0"

LIGHTING FIXTURE SCHEDULE

FIXTURE				LAMPS		WATTS/		
TYPE	VOLT.	DESCRIPTION	MANUFACTURER	QTY.	TYPE	FIXT.	REMARKS	LOCATION
G1	120VAC	SINGLE HEAD TYPE III 3000K WHITE LED CUTOFF FIXTURE ON 20' POLE	GARDCO P21-A2-1-3-80LA-WW-VOLTAGE-FINISH-TL	1	3000K WHITE LED	80	FINISH PER ARCHITECT	PARKING LOT PER DWGS
G1A	120VAC	SINGLE HEAD TYPE III 3000K WHITE LED CUTOFF FIXTURE ON 20' POLE	GARDCO P21-A2-1-4-80LA-WW-VOLTAGE-FINISH-TL	1	3000K WHITE LED	80	FINISH PER ARCHITECT	PARKING LOT PER DWGS
G2	120VAC	TWIN HEAD TYPE IV 3000K WHITE LED CUT-OFF FIXTURES ON 20' POLE AT 180° ORIENTATION	GARDCO P21-A2-2-4-80LA-WW-VOLTAGE-FINISH-TL	1	3000K WHITE LED	160	FINISH PER ARCHITECT	PARKING LOT PER DWGS
G3	120VAC	3000K WHITE LED PEDESTRIAN PATHWAY FIXTURE WITH LUMINOUS REFRACTIVE LENS DIFFUSER TOP 14' H OVERALL	SELUX MTRCL-14-4-3L35-30 SERIES BEGA 8464 EQUAL	1	3000K WHITE LED	90	3 SIDED DIRECTION OPTICS NEED TO BE ORIENTED CORRECTLY TOWARDS SIDEWALK TO MINIMIZE GLARE	PATHWAYS PER DWGS
R10	120VAC	RECESSED 5" APERTURE 2200 LUMEN 3000K WHITE LED DOWNLIGHT WITH 20° NARROW BEAM DISTRIBUTION	EDISON PRICE DL-XSM2-5DL-L22S-30K-20D-COL	1	3000K WHITE LED	34	FINISH PER ARCHITECT	EXTERIOR SOFFIT AND CANOPY
W4	120VAC	EXTERIOR WALL MOUNTED ADA 3000K WHITE LED DOWNLIGHT FIXTURE	BEGA 2380 LED	1	3000K WHITE LED	12	FINISH PER ARCHITECT	EGRESS DOORS AND STAFF ENTRANCE PER DWGS

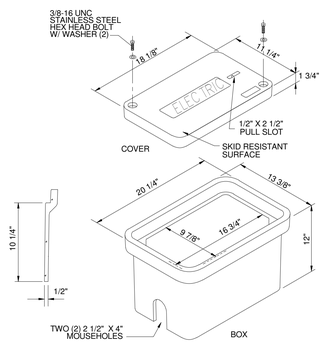

HANDHOLE DETAIL

NOT TO SCALE

NOTE:

1. HANDHOLE AND COVER TO BE H20 LOAD RATED AT ALL PAVED AREA INSTALLATIONS.

HANDHOLE SCHEDULE

TAG	OUTSIDE DIMENSIONS	INSIDE DIMENSIONS	BOTTOM	COVER	COVER LOGO	REMARKS
	LxWxH	LxWxH				
HH1	11"x9"x6.75"	8.5"x6.5"x6"	OPEN	NON-GASKETED	ELECTRIC	
HH2	14.75"x14.75"x12.75"	12"x12"x12"	CLOSED	GASKETED	TELEPHONE	

REVISIONS

#	DATE	DESCRIPTION

READING PUBLIC LIBRARY

64 MIDDLESEX AVE, READING, MA

cbt 617 262 4354 cbtarchitects.com
110 canal street boston, ma 02114

RFS engineering
Rist Frost Shumway Engineering, P.C.
71 Water St
Laconia, NH 03246
P: 603.524.4647
F: 603.524.7653
www.rfsengineering.com

THIS DOCUMENT IS PREPARED BY RIST-FROST-SHUMWAY AS AN INSTRUMENT OF SERVICE FOR USE SOLELY WITH RESPECT TO THIS PROJECT. ALL REPORTS, PLANS, SPECIFICATIONS, INCLUDING ELECTRONICALLY, IN WHOLE OR IN PART, FOR ANY REASON EITHER THAN FOR THE SPECIFIC PROJECT AND PURPOSE FOR WHICH THIS WORK WAS PRODUCED WITHOUT THE EXPRESS WRITTEN PERMISSION OF RIST-FROST-SHUMWAY ENGINEERING, PC.

READING LIBRARY
DESIGN DEVELOPMENT

ELECTRICAL SITE DETAILS

SCALE	PROJECT #	DATE ISSUED
1/8" = 1'-0"	7415.001	04.23.14

ES-000

4/22/2014 4:32:16 PM

SITE LEGEND

- POLE MOUNTED FIXTURE, "X" INDICATES FIXTURE TYPE, (REFER TO LIGHTING FIXTURE SCHEDULE) PROVIDE HEADS AS REQUIRED
- POST TOP FIXTURE, "X" INDICATES FIXTURE TYPE REFER TO LIGHTING FIXTURE SCHEDULE
- BOLLARD LIGHT FIXTURE
- TELECOMMUNICATIONS MANHOLE
- ELECTRIC MANHOLE
- BLUE LIGHT PHONE LOCATION
- UTILITY POLE
- TRANSFORMER
- HANDHOLE
- GENERATOR LOAD BANK
- UPE — NEW UNDERGROUND PRIMARY POWER
- USE — NEW UNDERGROUND SECONDARY POWER
- UGL — NEW UNDERGROUND LIGHTING

DRAWING NOTES

1. THE FOLLOWING NOTES ONLY APPLY TO THIS DRAWING.
2. REFER TO GENERAL NOTES, ELECTRICAL TRADE NOTES, LEGENDS AND ABBREVIATIONS ON DRAWING ES-000.

(3) STUB AND CAP CONDUIT FOUR FEET (4'-0") FROM BASE

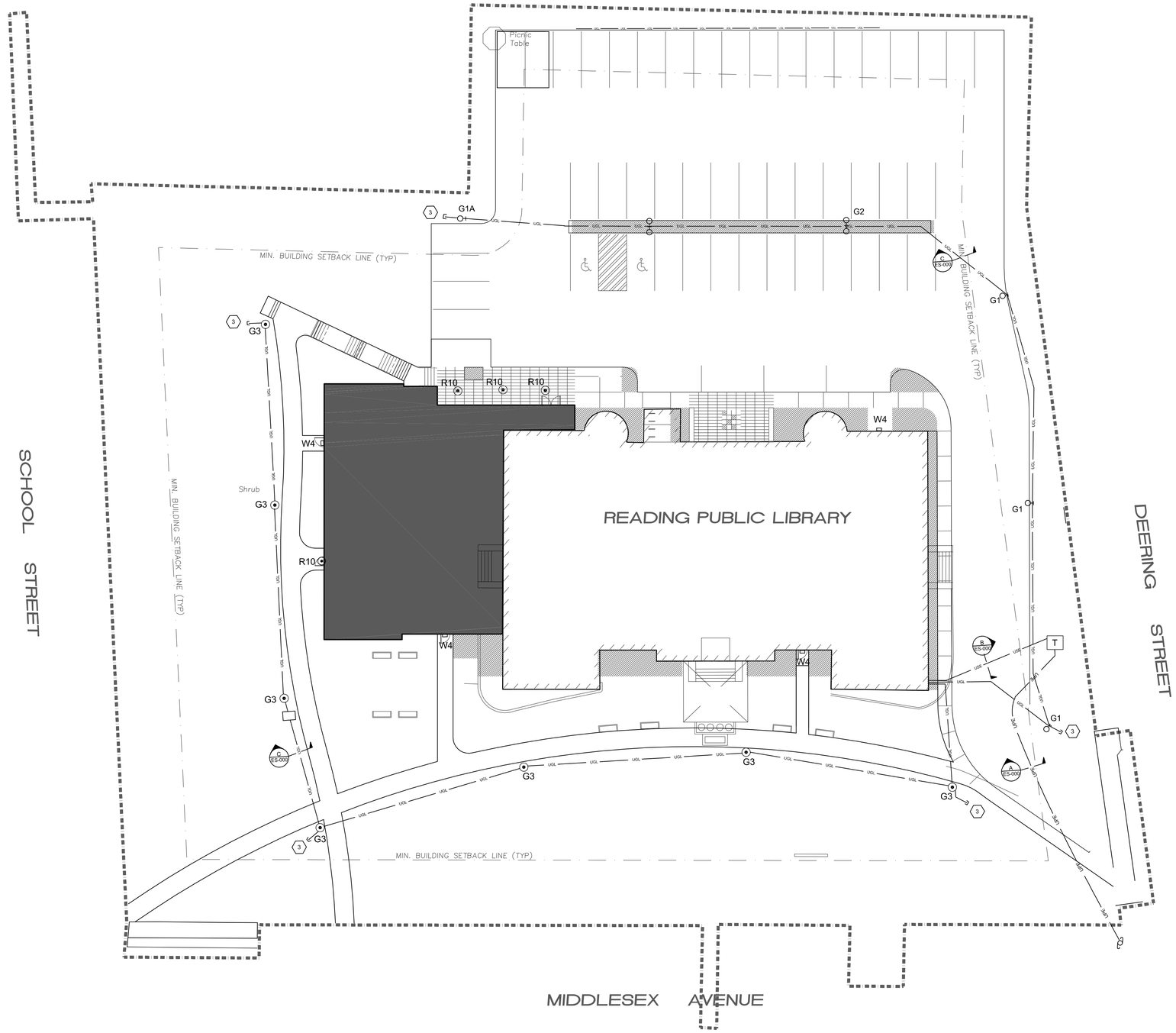

REVISIONS

#	DATE	DESCRIPTION

READING PUBLIC LIBRARY

64 MIDDLESEX AVE, READING, MA

cbt 617 262 4354 cbtarchitects.com
110 canal street boston, ma 02114

RFS engineering
Rist Frost Shumway Engineering, P.C.
71 Water St
Laconia, NH 03246
P: 603.524.4647
F: 603.524.7653
www.rfsengineering.com

THIS DOCUMENT IS PREPARED BY RIST-FROST-SHUMWAY AS AN INSTRUMENT OF SERVICE. THE REPRODUCTION, IN WHOLE OR IN PART, OR AFFIXING OF THE SEAL TO ANY DOCUMENT PREPARED ELECTRONICALLY, IN WHOLE OR IN PART, FOR ANY PURPOSE OTHER THAN FOR THE SPECIFIC PROJECT AND PURPOSE FOR WHICH THE WORK WAS PRODUCED WITHOUT THE EXPRESS WRITTEN PERMISSION OF RIST-FROST-SHUMWAY ENGINEERING PC

READING LIBRARY
DESIGN DEVELOPMENT

ELECTRICAL SITE PLAN

SCALE	PROJECT #	DATE ISSUED
1" = 15'-0"	7415.001	04.23.14

ES-100